The Domestic marine Series

The Silencer Project

The Power of "The Night Sun!"

U.S. Patent NO. 10,249,996

Television Commercial Silencer
Electrical Wall Outlet Receptacle Tap



Book III

The True "Story," The Whole "Story,"
and Manuals & Schematics

Author of The Domestic marine ®
from True Life Poet™

The Silencer Project

The Power of **“The Night Sun”**

☼+◖ = *

No part of this book(s), series(s) or the related files may be reproduced or transmitted in any form, by any means (electronic, photocopying, recording, or otherwise) WITHOUT the prior written permission of all members of

The Silencer Project dedication is to my Filipino family, and beautiful wife Nelfa whose March 8, 2024 one year wedding anniversary present and gift is and was a car, a present and gift, for her and family
WITHOUT whose undying support this work would NOT have been possible?

Disclosure:

This book and/or series are subject to copyright, trade secret, or other legal rules and may NOT be forwarded WITHOUT the author's written permission?

YOU must NOT copy or disseminate this book or series.

Any opinions expressed in this book or series do NOT represent the official positions of the U.S. Department of the Navy or any of its associates?

Let's begin

The Silencer Project:

The Power of **“The Night Sun”**

☼+◖ = *

Chapter 1 – The Origin of The Silencer Project

Somewhere around 2014, since I was always messing around with computers, such as, building media center PCs (Audio/Video) for my immediate family and taking apart electronic equipment in general, that my oldest brother mentioned that if I could come-up with a WAY to mute the TV while turning on the radio, I'd make a lot of money?

I didn't give this idea a whole lot of thought at the time that it was mentioned to me because I was aware that any manipulation of a broadcast signal had legal implications, after all, remember the 1980's attempts at this?

In 2014, however, I had already decided to start writing my book. I'd decided that the time had come to start focusing on my book writing after turning 50 years old. -- My birthday is 12-30-1963.

The first reason that decided to start writing was because Mark Twain began his writing career at the age of 50. The other reasons are personal.

. . . Watched much television because I had installed a couple cable-cards into my desktop media center PCs that I built for my "SELF." -- Liked to record basketball games to my hard drive and burn them to disc.

One day, must have been agitated about something because it seemed as though the television commercials would NOT end. . . . They must have had some extra time slots to fill? -- I couldn't take another

commercial! . . . (The idea of muting and turning on the radio came to mind and it seemed like a great idea at the time?).

Muting the television was NOT an issue but was so angry about the bombardment of commercials that wanted some recourse! . . . (Set my mind in analysis mode on this problem, once and for all!).

In January of 2017, now that my book writing was focused and begun work on my Television Commercial Silencer Electrical Wall Outlet Receptacle Tap prototype and while watching the election results, decided to reopen Hassey Solutions Old-Fashioned Service, computer business in Lehigh Acres, Florida.

I never had any interest in social media until business pages became available so decided to create a social media business page to get the word out about my products and services but was NOT permitted to create the business page WITHOUT first creating a personal page.

Eager to get started, forgot to consider the reasons that never had any interest in social media in the first place; just moved forward with the creation of the personal page followed by Hassey Solutions business page, however, also decided to make productive use out of the"personal page"and use it to help "take back my ‘True Life.’"

Wasn't long after creating the personal page that received a friend request from my Tomboy friend from childhood?

Side Note: Unlike in the Philippines, a Tomboy in the United States is NOT a homosexual?

This online encounter with my Tomboy childhood friend was the last thing that I'd expected at this time because she was already the focal point of my childhood in my book The Domestic marine, ® as my childhood first love!

After receiving my childhood first love's "Friend" request and since she was already in my book, my first thought was that I was right all along and that she must still have some feelings toward me; I was elated!

Shortly, grew saddened though when several days had past and she still had NOT responded to my reply to her request. -- I was NOT sure how to proceed with my work from here?

Finally, after several days she responded, and typically, she offered little of her "SELF" but had many questions. . . . -- My nature is to spill my guts while other men will say that's the last thing that one wants to do with a woman.

Plus, again, once a woman knows that a man is interested in her, so it begins, the ritualistic games or, since the man is no longer a challenge, the woman suddenly departs!

I had no time for childish games as I had several projects running in parallel and was determined to "take back my 'True Life!'" However, I loved this girl, like no other! -- I had to see what her intentions were, but, from the beginning, . . . had to "draw a line in the sand," something that I had never done with any woman in the

past and would never have done with this woman at any other point in my "True Life," but then!

The more that I spilled my guts, the more unintelligible her responses.

Therefore, I made my feelings absolutely clear to her and she stated, “I’ll never feel that way about YOU.” -- It hurt! -- Remember, had NOT seen or heard from her in over 30 years since High School and it really hurt! --That was new for me!

At least I knew what I needed to know so that I could get on with my projects and “taking back my ‘True Life!’” -- I did have to work for her friendship that she stated was all that we could ever have together.

I was okay with that but for some reason was compelled to tell her my deepest thoughts and feelings for her as a child.

She confessed that “no one has ever talked to me like that before!”

However, as impressed as she seemed to be with me, she maintained that we could never be more than friends. I conceded and said, “I’ll always be grateful that I had the opportunity to tell YOU how a felt and feel about YOU” and was absolutely planning on leaving it at that and getting on with my projects! . . . Wham! She drew me back into her unintelligible ritualistic games again.

She, prior to this point, was giving me advise on what to watch out for in a woman and she was spot on in her details but after I shared my true feelings toward

her, she began doing the things that she had just warned me to watch out for from a woman and she was NOT even aware of what she was doing.

It was scary, it was frightening, but it was comical too!

She had me so mixed up and confused that I had no clue what to believe from her anymore.

Suddenly, my crowdfunding efforts started to be realized and my online “Friends” began to grow exponentially right before her eyes and my Kickstarter Project began receiving attention and my childhood first love that just told me that she would never feel the same way about me as I did about her and that we could ONLY ever be friends, called me sweetie and offered to fly down and have dinner together.

. . . There was a deadline on my NON provisional Patent and did NOT have time to sort-out what was going on in her head. I needed to see her to be able to determine her true feelings and intentions toward me! If it were any other woman, It would NOT have been necessary to go to such an extent but as I said, I loved this girl like no other!

I decided to drive up to Pennsylvania to see her and she agreed that once I arrived she would buy me dinner at a Chinese restaurant near her home and also arrange a get-together with other High School classmates of mine.

Her and I were E-mailing, texting and even spoke on the phone together. She also gave me her sister’s mobile number to text and her daughter’s E-mail

address so that I could sign all of them up, to share my vacation points.

Unfortunately for me, as I was planning my trip up to Pennsylvania and flight into the Pittsburgh airport, one of her old high school boyfriends came out of NO where and offered me a ride from the Pittsburgh airport, but also fortunately for me, that is, while she remained unaware that I remembered her old boyfriends from high school, and recognized what was transpiring online, hence, my Tomboy first love from childhood found one of her old high school boyfriend via my efforts to see her while I was trying to determine her true feelings and intentions toward me, and, once again, it hurt!

She was able to find one of her high school boyfriends and hurt me at the same time because of my efforts, a win win! . . . I cried for several days, had never done that before but soon took solace in the fact that I was the one to bring her happiness. -- I hold onto that sentiment to this day and it gives me a warm feeling inside.

The night prior to my Tomboy friend from childhood finding one of her high school boyfriends, my dreams were asking me if I wanted to release something of hers that I was holding onto all of these years! I would have never let go of whatever it was that I was holding onto of hers any other time in my "True Life" but this was my best opportunity to “take back my ‘True Life’” and my Tomboy first love had just prior told me that “YOU have to start letting people go!”

Therefore, when my dreams that night asked me if I wanted to let go of whatever it was that I was holding onto of hers, I said yes, since that was what my Tomboy childhood first love wanted. . . .

Something of hers left me that night!

To this day, I still do NOT exactly know why but I still wanted to see her and make sure that she was alright. -- While I was driving to Pennsylvania to see her, I pulled over and dosed off for a short time at a rest stop and a dream told me to take a different route then I had originally planned to take; the new route took me into Ohio instead of Pennsylvania and the last text from my Tomboy childhood first love instructed me to go to my mother's house in Ohio and text her from there. I did exactly as she requested but no one wanted to get-together with me and my childhood Tomboy first love's final public online message to me accused me of stocking.

After a quite painful, something else that I had never experienced to that extent, short visit at my mother's house in Ohio and after the 2017 total eclipse of the sun ☼+◖ = * that Monday, drove back to Florida and again, it hurt!

Finally, it turns out that I am grateful to my childhood first love, NOT ONLY for providing me the opportunity to tell her how I truly felt about her, but also the opportunity to release what it was of hers that I was holding onto all of those years. Her spell was returned to her to recast upon her old boyfriend, while I was freed to start a new journey and adventure! Though I'm NOT quite sure what it was that I released of hers that

“Night Star” * night, I know exactly what I gained; my passion, now available for MY "True Love." *♥

After months of recovery, while at the same time continuing work on my projects, shortly, thereafter, received another friend request from another childhood love of mine. . . . What are the odds?

-- ONLY, this love was deeper, inside, somewhere? -- Some more sorting to do, time to resolve, the

“Trophy Love!”

The “Trophy Love” chapter can be found in the main book, The Domestic marine: ® Never before and Never again; There is ONLY one “Domestic marine.”

Sub Chapter 1 – "TO BE or NOT to BE"

Today's my 54th birthday (December 30th) but thought I'd do things a little differently and give everyone else a gift today. Last Poem of 2017:

"..was told that I'm out of sync with society, but, how could this be, when God just sent me an angel in my time of need? Therefore, must be in God's favor, and there's no place that I'd rather be, so I'm NOT out of sync with society; society's out of sync with me!"

Copyright © 2017-2024 Richard Jon Hassey. All rights reserved.

There is much more relationship reading WITHIN The Domestic marine ® companion book, The Furthest & Nearest Night Stars: ☼,◖ The Birth of The "Night Star," * where you'll also find The Tomboy "Story," that is, WITHIN Book II of The Domestic marine ® Tandem Book Writing and "Equational" and Engendered Poetry Series with parallel writing.

-- The editing and final proof for Book II, the companion book are currently in progress.

The companion book is slated for publication later this year, 2024.

2017 Post to my book Snippets' website:

"This has nothing to do with YOU directly and I hope that YOU don't mind my sharing it but some of my recent research and experiences have allowed me to draw certain conclusions about my own "True Life" and have been noticing others have been finding correlation. Sent this message to some and they relate.

I'm trying to build a FAN base for my book because marketing is so difficult today:

It's over $400.00 close to $500.00 for NON provisional patent. That's what I need. Good for about 20 years and there are some maintenance costs after so many years. NOT many realize how difficult it is for someone in my situation to pull off some of the things that I have. I'm NOT wealthy and never had any support, as a matter of fact, just the opposite! My book has much that has NOT yet been disclosed and don't think anyone will fully understand until they read it! That's why been so aggressively trying to market early! Hard to get the word out through normal channels. I wish things were different but I never compromised my principles for anything my entire "True Life" and I'm NOT about to start now! My own family didn't even contribute a single dollar to my Kickstarter campaign and NOT even sure if they would be willing to buy my book; they'd expect me to give it to them! All that I've been doing recently and really my whole "True Life" has been for their benefit and others' as well and a consequence to that just happen to be helping myself in the end but people are so bitter in their own lives that when they see someone climbing the ladder they instinctively try to knock them down.

'Misery loves company!'

Sorry for any intrusion!"

HERE'S THE POEM OF MINE AGAIN FROM THE MAIN BOOK IN THE DOMESTIC MARINE ® SERIES AT THE END OF CHAPTER 1 – EARLY CHILDHOOD:

GOD GAVE US BOUNDARIES SO THAT WE MAY MAKE CHOICES? WHEN A PERSON CHOOSES TO CLOSE THEIR HEART, MIND, SOUL, "SELF" THEN NOTHING GETS IN BUT EVIL KNOWS NO BOUNDARY? WHEN ONE OPENS THEIR HEART, MIND, SOUL, "SELF" THEN THEY ARE FILLED WITH NO ROOM FOR EVIL ? CHOOSE TO OPEN YOUR HEART, MIND, SOUL, "SELF" AND ONE WILL NO LONGER HAVE TO CHOOSE TO LOVE ; LOVE WILL NO LONGER BE A CHOICE ?

Copyright © 2017-2024 Richard Jon Hassey. All rights reserved.

Someone once told me that the bible says that one is supposed to protect their heart above all else?

The guy that told me this even has a tattoo of the bible verse on his chest, due to his recent (At the time of this manuscript writing) hard luck "True Life" lessons and he believed that this bible verse meant that one is supposed to keep their heart closed and choose when to open it?

There is a misconception here.

My "True Life" lessons have taught me that one is always suppose to keep their heart open! The WAY to protect one's heart is to keep one's heart true and pure!

One must let everything into their heart and one's Heart, Mind, Soul, “SELF” will sort it out!

I've been told that my approach to "True Life" has always been one of following my heart with God at my back!

This is how I conduct my "True Life!”

If a person's heart contains ONLY true and pure love, then, if one follows their heart, God will be at their back to help sort out and sometimes even determine the consequences!

Chapter 2 – Prior to Provisional Patent

Before delving WITHIN chapter 2 here's a lead-in to express my feelings on science and/or genetics:

In April 2024, I bought some watermelon seeds as I've done so many times since of a child's age, but MORE often than NOT, I simply got my watermelon seeds from a watermelon?

For the ➞rst time in MORE than 50 years I bought a pack of watermelon seeds from a grocery store in the Philippines that were NOT black, but coated with a purple sticky substance of science.

Logic said the purple coating was a chemical fertilizer formulated to encourage sprouting.

Seed packaging companies need any edge that they can get and also need to sell outdated merchandise but seeds are NOT products or commodities, but "True Life" TO BE?

The purple chemicals give the seeds the best chance to sprout MOST likely, but the worst chance to grow MORE likely.

These purple seeds did sprout, but soon after died, while some black watermelon seeds that someone tossed in the garden from a watermelon at one of our cook-outs weeks after the planting and dying of the purple watermelon seeds and sprouts are ourishing today WITHOUT any fertilizer or water, just rain.

-- Which is less than any other April and May in the Philippines because the U.S. troops are here so science put a hold on El_Niño tampering, cloud dissipation in LA and weather event manipulation until they take-over Beijing?

https://en.wikipedia.org/wiki/El_Niño–Southern_Oscillation

NOT ONLY is it foolish to trust science but any company or government today.

https://www.healthdietrecipes.com

Recall it was somewhere around 2014 that my oldest brother mentioned that if I could come-up with a WAY to mute the TV while turning on the radio, I'd make a lot of money?

My brother was money hungry like my mother.

I blamed commercialization for their problem.

The ironic part is that they didn't want to watch the commercials just shop. Most people don't care what they buy they just want to shop and watching the commercials upsets them because they don't have the money to go to the mall.

I all WAYS hated money, Walmart, malls, oil companies, government and the Bastard and Bitch but commercials were Satan's work and the worst.

This chapter is continued WITHIN the The Silencer Project Companion Book...

Chapter 3 – Prior to NON Provisional Patent

On the drive up to Ohio I also spoke to one of my sisters on the phone and through our conversation I sensed the emotional abuse that was waiting for me from my family, NOT just my old “friends.”

While in Ohio waiting on the text message promised by my Tomboy “friend,” My sisters refused to respond to my messages and phone calls, my mother said she didn’t love me anymore, my brother put me through hell.

The “friends” from high school that I reached out to either did NOT answer or made a joke out of me.

The childhood and high school “friend” that did the Kickstarter video for me would NOT see me so I wired the money for the video to him?

The high school “friend” that was staying in Tampa called me, I’m sure to play with me some MORE.

I met with one “friend” from high school at a bar and bought him and his wife drinks all night but they were seeing if it was really me after all the years and ONLY interested in what I could do for them?

There were ONLY two other points in my “True Life” that were worse than the experience of this trip.

I learned what I needed to know and when I returned to Florida I realized that it was my oldest brother that sabotaged my efforts to start a relationship

with my Tomboy friend because he spoke with the high school “friend” of mine staying in Tampa. Both my brother and the guy in Tampa had their own pressure washing businesses so I connected them to possibly help one another? My brother, who also liked the older sister of my Tomboy “friend,” once again set me up for failure and involved the entire family and “friends.” -- who needs enemies?

When I got back to Florida, I began working on the NON provisional patent? A provisional utility patent expires 12 months after issue and one must either convert it to a NON provisional or file a new NON provisional? I decided to file a new NON provisional patent after filing the provisional utility patent and I claimed priority on the provisional?

Claiming priority on the provisional patent in my view gave it value before it expired by allowing me to hold onto the January 2017 filing date as the date of first invention, which turned out TO BE a wise decision because some guy tried to claim my invention almost word for word his own but he didn’t realize that I had filed a provisional and claimed priority, thus, his dates were off, so his theft of my work was for NOT?

It was December 2017 when I finally finished-up the NON provisional utility patent and was successful at opening and certifying my own U.S. Patent Office account for filing purposes. I filed the NON provisional and received my filing receipt.

It was after the 12 month mark when I heard from the patent office by letter. The letter stated that the claims were unacceptable because they were in narrative form instead of a standard form? The examiner ONLY gave me 30 days, but from date of letter, to correct and resubmit just the claims, which gave me less than two weeks.

I did NOT find this reasonable or possible as I was working through the regular mail?

He was forcing me to get an attorney.

I didn't know how to go about getting an attorney because I had discovered when notified that I was eligible for student loan reimbursement a couple years prior, but was refused the same, that LEE COUNTY, FLORIDA was the ONLY county in Florida with a private attorney referral service?

The corruption in LEE COUNTY, Florida blocked me from anything and everything I attempted as a human being for 30 + years.

The attorney that I had to get to fight for the student loan reimbursement, a couple years earlier before the patent, took half, $5000.00.

-- I also hit Hyundai with the Federal Lemon Law at this time and remember the tow truck driver in the main book that I made come to the cabin in the wildlife preserve and load the 2016 Food Escape, sold to me as a brand new 2017 after Ford turned back the mileage, that I added to my business and personal bankruptcy? --

Additionally, used this attorney to get a new air conditioner at the apartment complex that I lived for 8 years as the ONLY one to never miss a rent payment, after going MORE than a month WITHOUT AC, when it is state law that a landlord provide air conditioning?

After paying him and getting the new air conditioner, the apartment complex new owner forced me out and blacklisted me so moving forward I needed a private owner landlord. I could NOT rent from any MORE managed communities because this new owner bought them all in LEE county?

Thank God for hurricanes and The Domestic marine. ®

I would NOT utilize the attorney referral service or online search engines as they too are all corrupt, especially in LEE COUNTY, FLORIDA so I used the old-school phone book yellow pages to prime my search and stay anonymous?

The first patent attorney that I called, after explaining my filing of the provisional and then the NON provisional while choosing to claim priority of the provisional instead of converting it, interrupted me and said that, he didn't believe that I did all that because he had been doing patents for 30 years and that they were hard for him?

As the conversation continued, I recognized that he was NOT up to date on his knowledge of procedure of the patent office as I just filed a provisional and NON provisional and was utilizing current research.

Like any job or carrier today, one must stay up to date on the changes and innovations, however, once an attorney of privilege buys his WAY into the “profession,” they need NOT know anything as they are assured that their clients need them, just as government mandates? Therefore, those in the highest places are the MOST incompetent.

I told him that I was going to check prices and would get back to him?

Licked my thumb and turned the yellow page, after page.

Called another number but he said that he NO longer did patents but knew a dependable guy in NAPLES, FLORIDA, collier county. That appealed to me because LEE COUNTY and me were NOTHING if NOT enemies?

NAPLES was 30 minutes south, county to county, but I was coming from the wildlife preserve, which was Punta Gorda, until Cape Coral annexed it?

More like an hour drive for me to this NAPLES, FLORIDA patent attorney in Collier county?

All this attorney wanted TO BE assured of was if I had a computer repair business in LEE county as I claimed because he knew that if that were the case then I was part of the privileged class and that I was someone that he was permitted to help because CORPORATISM’S philosophy of economics is wrapped around the concept of waist, that is, master-slave, that is, the new financial slavery and MANDATES?

The attorney and his partner that did all the work and I discussed the details of the provisional and NON provisional utility patents that I had all ready filed and that the NON provisional had all ready expired.

I explained my concern with the time limit on submitting the needed format adjustment on the claims.

The attorney said, as you know, the claims are the most important part of a patent. To submit what you need, will cost you $2,500.00. Since you have a computer repair business, I'm guessing that won't be a problem?

Bit my tongue, but said, I'll need a little time?

The patent was done and the patent office said it was a format issue, formality?

The attorney, in essence, was receiving $2,500.00 to have his secretary put my words in a template and click submit.

I conducted the necessary transaction with his secretary over the phone the following week.

It was a week or two later when I received an E-mail of the examiner's decision and then a phone call from the attorney saying he got the patent.

After reviewing the newly submitted claims including those claims the examiner accepted and which were rejected, I told the attorney during the phone call that "WE" can do better. He didn't like that, but it was also exactly what he wanted. He just wanted me to soften my approach with him. I was all ready at my wits end with greedy idiots. I told him to followup

with a demand for all the claims. He said that's a continuation. I said to continue demanding all of my claims.

While the attorney was preparing to file his continuation of the NON provisional patent, I received a letter from the Marine Corp Trademark Communication Office. -- I also applied for a trademark on The Domestic Marine ® in parallel with the patents. -- My intension, since of a child's age, was to write a single book, while the title idea of The Domestic Marine ® came about in the early 1990s. The Trademark idea came in 2017.

The letter stated that the Marine Corp Trademark Communication Office had over 200 trademarks with the word Marine in them and that their office was going to monitor my progress, that was 2018.

The Domestic Marine ® mark was NOT registered yet at this time.

All trademarks enter a dispute phase 30 days before registration WITHIN the National Gazette.

On the 30th day, last day before registration and publication of The Domestic Marine, ® the Marine Corp Trademark Communication Office, WITHOUT prior discovery, disputed my federal trademark application of a book title trademark of The Domestic Marine. ® -- The mark went into legal process.

As I was all ready utilizing an Intellectual Properties law firm for the NON provisional patent claims, I consulted the same on the filing of a response

to the trademark office on The Domestic Marine ® behalf?

The attorney demanded an evergreen retainer of $10,000.00.

As this is Book III, The Silencer Project: The Power of **“The Night Sun”** ☼+◖ = *, about U.S. Patent NO. 10,249,996, one can continue reading about the disputed book title trademark of The Domestic marine ® and unprecedented two following formal protests by the Marine Corps Trademark Communication Office leading to The Black Hill’s Time Capsule Trip, beginning in Florida, while ending after returning to Dallas, Texas from Indonesia with a bell clock, in Book I, the main book in The Domestic marine ® Tandem Book Writing and “Equational” and Engendered Poetry Series with parallel writing, entitled: The Domestic marine: ® Never Before and Never Again; There is ONLY one “Domestic Marine.”

I never trusted this attorney and like during the custody battle for my two daughters in LEE COUNTY, Florida beginning back in 1989 when the divorce attorney immediately put a lean on the house I had built in Cape Coral, Florida with a VA loan upon giving him a $2,500.00 retainer for any future owed monies, I got rid of him. “True Life” is too short to have these types WITHIN.

I began building Intellectual Property to turn the table on the Marine Corp Trademark Communication Office, starting with application of an International patent on The Television Commercial Silencer

Electrical Wall Outlet Receptacle Tap, U.S. Patent NO 10,249,996, but hired a different law firm to file it.

A couple E-mails with the original claim's adjusting attorney follow:

This chapter is continued WITHIN the The Silencer Project Companion Book and WITHIN the main book in The Domestic marine ® Tandem Book Writing and "Equational" and Engendered Poetry Series with parallel writing, entitled: The Domestic marine: ® Never Before and Never Again; There is ONLY one "Domestic Marine."…

Ed:

The rejection by the examiner appears to be due to prior art of a remote controlled standard power strip or multi outlet standard AC outlet extension? The patent was requesting protection on a remote controlled standard AC extension outlet for general use for electronic devices, like a TV, for normal operation of the electronic device.

Beyond powering on and off, there was no concept of any other usage mentioned.

Moreover, the attached power outlet module that I designed is what is being objected to by the examiner based on the prior art of a remote controlled standard power outlet extension for on/off of household appliances.

However, my outlet’s distinctive configurations provide a specific purpose and circuit design that the prior art can NOT achieve even if a concept was included WITHIN the prior art but wasn't?

My circuit designs are also low voltage and NOT meant for use as standard AC wall outlet receptacles but specifically for low voltage audio systems and devices and are user configurable?

In addition, my outlet configurations utilize a WiFi remote controlled power unit as well and these WiFi modules are sold for just such purpose of my intent, as are generic remote control power modules for electronic designs of one's own conception.

The Silencer is NOT employing or conceiving or implementing a prior manufactured remote control power strip for standard AC power extension to standard electronic devices for normal operation, but rather a distinctive and specific design and purpose that are configurable and upgradable.

See attached Silencer Outlet Configuration Module design. Plus, this is my ONLY Module that is being objected to NOT the one's that follow.

I have another point to be made that will also overcome the examiner's rejections that I will send shortly. I wanted to send my points separately so as NOT to confuse the distinctions?

Ed:

In the attached TV Configuration Module of my design, there is a clear distinction of "The Remote Controlled External Television Audio System Outlet." (A Specific and Distinctive purpose) However, no "OUTLET" truly exists!

The diagram merely symbolically depicts the power source in diagram method but all electronics and circuitry are contained WITHIN the Silencer and the power is taped from a secondary source after being received from the WiFi module or Remote control Power Module but NOT from a standard electrical power outlet of any kind and again the power being utilized is of a low voltage nature that a standard power outlet can NOT provide, NOR the design or configurations or upgradability?

One has to be able to plug in their designed device, all electronic component's require power to operate? One cannot patent electricity itself because it is NOT an invention but a discovery!

In addition, I can supply power or cut the power for the Television Audio System WITHIN this TV Module or the Radio internal Module or MP3 Player internal Module or Optical Audio Module or any other device's Audio Module all fully contained WITHIN the Silencer any where that I choose to and can also disrupt the audio signal itself rather than the power source such as in the 3.5mm Audio/Headphone Ports to accomplish the same end result?

These are just some distinctions that are apparent but I have further as well as the proprietary audio and/or power ports and cabling that would entirely circumvent any rejection's by the examiner?

Ed:

There’s a saying, “Shoot for the furthest star and the nearer stars are easier to grasp!” Actually, Ed, I’ve done so much creative writing and developed such a personal poetic writing style that I’m NOT sure if that’s an old Chinese proverb or if I just made it up now? LOL

Anyway, I did NOT thoroughly study the prior art because quite frankly it did NOT impress me. I’ve been out pacing the electronics's industry since the Internet began. I had no choice in the matter and many people expressed to me that in the years to come that I would NOT be able to keep-up with the industry paces. However, that has NOT been the case in the slightest. I

never moved on with my studies of any subject during my schooling until I was satisfied that I had a solid grasp of the subject matter. I have a rock solid foundation to the industry and built every layer on top of said foundation as the layers presented themselves and now I added some of my own layers finally because all of my layers in my past were simply stolen from me!

Based on the prior art that YOU submitted to me for my review, I do NOT see anything that would preclude our grasping that furthest star and all the rest along the way!

For the same reason that I presented to YOU above for why many believed that I would be out-paced by the industry, it appears to me that others have NOT attempted to keep pace and simply conceded to the industry. I am so grateful to YOU, Ed, in many ways and one of those ways is that YOU just confirmed with the information from the Patent Office that YOU recently sent to me that this is in deed the case!

People have simply lost hope and are buying into this fallacy that the American Dream no longer exists. YOU have just added much “Human Intelligence” to some chapters in my book, thank YOU!

All this prior art that YOU have sent to me is mechanical in nature and serves their own distinctions and much of it has nothing to do with the electronics's industry but other industries and the ONLY prior art that was sent to me that warranted a closer study is for an entirely different purpose and of a general appeal, NOT specific like mine and bluntly there should be no way

that the examiner can disagree with our distinctions in our amended claims. In fact, the specific prior art that I am referring to that is a general apparatus could be purchased along side my Silencer after manufacturing as a supporting device but incorporating additional outlet's WITHIN my device shall be allowed for this reason and it is a quite valid reason, that is, standard wall outlet power receptacles are freely used and the specific distinction in my invention that I am referring to is that besides standard freely used power outlet receptacles, my power outlet receptacles are NOT of a general type but rather the distinction is that they are designed specifically for audio devices of a low voltage type and for specialized purposes.

The prior art mechanism can NOT be interchanged with my invention's distinction and perform the same function WITHOUT serious issues to consider, WITHIN my circuit designs.

Chapter 4 – The Poker Game Algorithm

I was the ONLY one that graduated from then Edison Community College in 1992 in Fort Myers, Florida with an “analysis” added to their programming degree, because of my ability to diagnose problems and my leadership as well as ability to help others along the WAY.

My final project was designing an electronic poker card game.

The Instructor of the Turbo PASCAL programming course, who was also my academic advisor, and assigned by Edison Community College TO BE 100% responsible for my gainful employment, assigned the graduation projects.

This Turbo PASCAL course that was required for graduation was my second time around because this same Instructor failed me the first time I took the course.

The previous Turbo PASCAL course that I had failed the previous quarter was the first programming course that I had ever failed WITHIN the 5 years that I attended then Edison Community College in Fort Myers, Florida, beginning at the Collier County Branch in Naples, Florida, and, while looking back, I see now that the failure was due to my proficiency of the language, while helping every other student along my programming journey.

My Veterans Administration Vocational Rehabilitation counselor at the Federal Building in Miami, Florida told me to “never let Edison Community

College forget that they are responsible for finding YOU a job."

The challenge that I found while coding an electronic poker game in Turbo PASCAL, besides the graphics, at the time, was in making sure that a card from the deck of 52 could NOT be dealt twice, in time.

My solution was in building an array(52) of a deck of 52 (cells) cards, but with the twist of an iterated loop to include a recursive trip through the array(52) with every dealt card from the initial deck and remove it from the array(52-1) deck with every dealt card thereafter to expect.

The Poker Game Algorithm became poetic.

Everyone in the computer lab followed my progress on the poker game project, and after assigning ASCI characters to each card, ♥♣♦♠ everyone said that if I scanned in face cards that my electronic poker game was marketable?

I compiled my Turbo PASCAL source code into an executable (.exe) before turning the completed program and project into the Instructor for a final grade.

The Instructor insisted that I give him the source code, which became a condition of passing the course, therefore, graduating, after I initially refused to do so?

His plans were to open his own software design company?

In 1992, there were NO other options for continuing one's education in Southwest Florida so my plans were to move to Tampa, Florida and attend

the University of South Florida but my programming degree was an AS, Associates in Science degree and my understanding was that an AA degree, Associate of Arts degree was required to enter a university, YOU see?

My graduating programming Instructor and academic advisor at then Edison Community College told me that he could get me into the University of South Florida in Tampa, Florida with my AS degree because of my leadership qualities?

I was also working as a cashier at Circle K convenience store at night and the manager said that I could transfer to a Circle K in Tampa?

This chapter is continued WITHIN the The Silencer Project Companion Book. ...

Chapter 5 – Move to Tampa

Some time after handing the Instructor the source code for the final graduation project and finalizing my departure from Circle K in Fort Myers, I received my AS degree in the mail as I did NOT attend the graduation ceremony.

I began planning my move to Tampa, to transfer to a Circle K and enroll for classes for the next quarter at the University of South Florida.

My brother and his girlfriend decided to move with me. My brother said he always wanted to live in Tampa and his girlfriend's father lived there, who he claimed they got along better with than her mother?

I loaded a U-haul with all of my belongings and attached my car in tow, while I, with my oldest brother and his girlfriend drove to Tampa in the U-haul together.

At this point I had already secured the apartment at a complex with first, last and security deposit ($1500) in all.

Once we arrived at the apartment complex and furnished the apartment with my belongings, I headed by my "SELF" to Circle K. After arriving, the manager said that "we're NOT hiring at this time?"

Angrily, I drove to the University of South Florida and entered the admissions office.

A woman in the admissions office told me that my academic advisor was mistaken and that I needed an AA degree to enroll for classes at their university?

Frustrated, confused, angry and hurt I drove back to the apartment complex and when I opened the door to my apartment, my brother and his girlfriend were sitting on my couch smoking a joint.

I couldn't take anymore of these idiots WITHIN my "True Life" and shut the door, got back into my car and began driving, NOT knowing where I was going.

After some miles of driving, I saw a sign for an efficiency apartment for immediate occupancy.

I pulled into the parking lot and paid for a week.

It was one room with a shared kitchen and bathroom among two other rooms.

Spent the entire week lying in bed thinking?

This chapter is continued WITHIN the The Silencer Project Companion Book and WITHIN the main book in The Domestic marine ® Tandem Book Writing and "Equational" and Engendered Poetry Series with parallel writing, entitled: The Domestic marine: ® Never Before and Never Again; There is ONLY one "Domestic Marine."…

Chapter 6 – Activity 5.0

See this DuckDuckGo APP launcher?

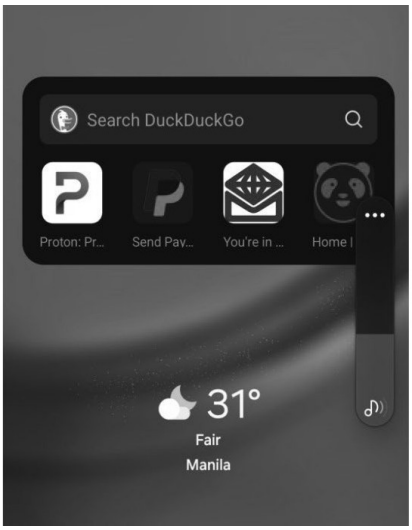

That's the exact concept WITHIN Activity 5.0 and 6.0 Security Application for the PC uploaded to AOL's software library that Richard Jon Hassey obtained a copyright on back in the 90s.

The Application (now called APP) made Windows 3.1 just another APPLICATION (APP) to launch from a secure launching platform.

It was 1992 when Richard Jon Hassey graduated from then Edison Community College in Fort Myers, Florida with the ONLY computer programming degree the school ever issued with an analysis attached at the end, that is, Computer Programming and Analysis degree.

This same year Richard Jon Hassey wrote Activity 5.0 Security Application for the PC and was under a Patent Assistance Program with IBM.

In 1992 is when, IBM severed ties with Microsoft and went solo on their OS2 project.

It was 1994, when I was attending Georgia School of Technology, Georgia Tech, when IBM released OS2 Warp, that included the feature to launch Windows 3.1 as just another APPLICATION (APP).

An attorney said that Activity 6.0 Security Application (APP) for the PC copyright gives BSPC Global Corporation its own GUI rights.

One can read MORE about this in The Silencer Project's companion book, The Poker Game Algorithm?

See The Silencer Project's Companion Book: The Poker Game Algorithm for more on these "Stories," computer science, and The ACES "ofLoves" ♥♣♦♠ of Code Talker's, shuffled by Genie Magician. -- The Genie that gave up wishes for magic. -- The Domestic marine ® Code Talker Series. ® -- The first recursive trademark, that is, a trademark WITHIN a trademark, book series WITHIN a book series, sub chapters WITHIN chapters, and a "Story" WITHIN a "Story."

Chapter 7 – The Silencer Project Stage 1

Television Commercial Silencer Stage 1 is a standard one gang electrical work box that holds a single standard residential electrical outlet receptacle. The standard outlet receptacle was rewired to support an 110/120 volt three position toggle switch.

The toggle switch while in the upward position (on) provides power to the top outlet ONLY and while the toggle switch is in the downward position (on) the toggle switch provides power to the bottom outlet ONLY. When the toggle switch is in the middle position (off) then neither the top nor the bottom outlets are provided any power.

One may be wondering: “how will this rewired outlet help me silence my television commercials?”

The concept could NOT be simpler. The complexity of The Television Commercial Silencer increases with each stage “inside the box;” but, ”outside the box” the functions and features increase as well while the complexity decreases for the End User.

you'll want to “stick around” and check out Stage 5 aka Final Product! Keep checking! Documentation will be updated periodically!

Stage 1: E.g., Configuration Option 1:

Flip the 3 position toggle switch to the middle position (off) and plug the male 3 prong grounded

electrical plug from the Stage 1 Television Commercial Silencer into an 110/120 volt standard residential wall outlet—an extension cord may be used if necessary. The standard rule for extension cords is that the diameter of the extension cord should be the same diameter as the device or larger.

Now that the Stage 1 Television Commercial Silencer has power, plug the 3.5mm male audio plug from a set of external amplified speakers (similar to computer speakers) into the audio headphone (3.5mm) female jack on your television.

Again, an extension cable may be used (3.5mm) –Make sure that the power switch on the external speakers is on. YOU can adjust the volume later.

Take the AC adapter from the external amplified speakers and plug it into the top outlet on the Stage 1 Television Commercial Silencer.

Grab your old “Boom box” and set the function switch to radio and turn the “Boom Box’s" power switch on.

Finally, plug the “Boom Box’s” power cord into the bottom outlet on the Stage 1 Television Commercial Silencer.

Walla! NO MORE LISTENING TO TELEVISION COMMERCIALS!

Flip the toggle switch up to power on your television audio or flip the toggle switch down to power off your television audio and simultaneously turn on

your “Boom Box’s" radio! Flip the toggle switch to the middle position (off) to turn both outlets off when YOU go to bed.

One can’t say that Stage 1 doesn’t “do the job!” However, if Stage 1 doesn't appeal to YOU, try Stage 2, 3 or 4! notice that I didn’t include Stage 5 aka Final Product! That’s because Stage 5 (Final Product) will appeal to EVERYONE! I’ll save one for ya!

P.S. Don’t forget that this was just Stage 1, E.g., Configuration Option 1.

Don’t like listening to commercials on the radio either? Flip your function switch on your “Boom Box” to CD or cassette tape or “yank-out” the power plug for your “Boom Box” and plug the power plug from your MP3 player into the bottom outlet on the Stage 1 Television Commercial Silencer.

Oops! Might have given away Stage 2!

More Documentation and Configuration Options on the way. Can’t wait? Hassey Solutions will answer any questions: Contact Us.

Chapter 8 – The Silencer Project Stage 2

Television Commercial Silencer Stage 2 is a standard one gang electrical work box that holds a single standard residential electrical outlet receptacle. The standard outlet receptacle was rewired and the 3 position toggle switch included in Stage 1 was replaced with a wireless receiver module -- multifunction hand held radio wave remote control included (also pre-installed a 12 volt battery into the remote controls of each Preliminary Stage 2 Television Commercial Silencer available in our Online Store).

When all outlets are off, depressing button one (1) on the hand held remote control provides power to the top outlet ONLY or depressing button two (2) on the hand held remote control provides power to the bottom outlet ONLY or depressing button three (3) on the hand held remote control provides power to the added female 3 connector grounded electrical outlet extending out of the back of the Stage 2 Television Commercial Silencer's work box ONLY.

One may be wondering: “how will this rewired outlet help me silence my television commercials?”

The concept could NOT be simpler?

The complexity of The Television Commercial Silencer increases with each stage “inside the box;” but, ”outside the box” the functions and features

increase as well while the complexity decreases for the End User.

you'll want to stick around and check out Stage 5 aka Final Product! Keep checking! Documentation will be updated periodically!

Stage 2: E.g., Configuration Option 1:

Plug the male 3 prong grounded electrical plug from the Stage 2 Television Commercial Silencer into an 110/120 volt standard residential wall outlet—an extension cord may be used if necessary. The standard rule for extension cords is that the diameter of the extension cord should be the same diameter as the device or larger.

Now that the Stage 2 Television Commercial Silencer has power, depress the off button on the hand held radio wave remote control to cut power to all outlets at the same time.

Plug the 3.5mm male audio plug from a set of external amplified speakers (similar to computer speakers) into the audio headphone (3.5mm) female jack on your television. Again, an extension cable may be used (3.5mm) –Make sure that the power switch on the external speakers is on. YOU can adjust the volume later.

Take the AC adapter from the external amplified speakers and plug it into the top outlet on the Stage 2 Television Commercial Silencer.

Grab your old “Boom box” and set the function switch to radio and turn the “Boom Box’s" power switch on.

Plug the “Boom Box’s” power cord into the bottom outlet on the Stage 2 Television Commercial Silencer.

Finally, plug the power cord from your MP3/MP4 player into the added female 3 connector grounded electrical outlet extending out of the back of the Stage 2 Television Commercial Silencer work box.

Walla! NO MORE LISTENING TO TELEVISION COMMERCIALS!

Press button one (1) on the hand held radio wave remote control to power on your television audio or press button two (2) on the hand held radio wave remote control to power on your “Boom Box’s" radio, CD player or cassette tape player etc. or press button three (3) on the hand held radio wave remote control to power on your MP3/MP4 player. Press the off button to turn off all outlets at the same time when YOU go to bed --one may also press the sleep button on the radio wave remote control to turn off all outlets after a short time period.

One can’t say that Stage 2 doesn’t “do the job!” However, if Stage 2 doesn't appeal to YOU, try Stage 1, 3 or 4! notice that I didn’t include Stage 5 aka Final Product! That’s because Stage 5 (Final Product) will appeal to EVERYONE! I’ll save one for ya!

P.S. Don’t forget that this was just Stage 2, E.g., Configuration Option 1.

Recall that I kept calling the remote control "the radio wave remote control?" The Stage 2 Television Commercial Silencer's included remote control operates off of low level radio waves NOT infrared waves like standard TV remote controls. Standard TV infrared remote controls use what are called "line of sight" light waves.

One must point the remote at the TV infrared sensor located somewhere on their TV. With radio wave remote controls, this is NOT the case. One can silence their television commercials from another room if one prefers. One may also keep the remote in one's pocket while doing the dishes!

Shazam! What if a radio and MP3/MP4 player were "shoved" into the electrical work box so that the End User would NOT even have to plug them into the Television Commercial Silencer?

Oh-yeah, don't most MP3/MP4 players utilize an USB port?

Oops! Might have given away Stage 3!

More Documentation and Configuration Options on the way. Can’t wait? Hassey Solutions will answer any questions: Contact Us.

Chapter 9 – The Silencer Project Stage 3

Television Commercial Silencer Stage 3 is a standard two (2) gang electrical work box that holds two standard residential electrical outlet receptacles. The standard outlet receptacles are rewired with a wireless receiver module, FM radio module and an MP3 player module inside the work box --multifunction hand held radio wave remote control included.

When all outlets are off, depressing button one (1) on the hand held remote control provides power to the top left outlet ONLY or depressing button two (2) on the hand held remote control provides power to the bottom left outlet ONLY or depressing button three (3) on the hand held remote control provides power to the top right outlet ONLY? The bottom right outlet is wired always hot and is NOT remote controlled. It is also NOT wired for low voltage.

The always hot outlet is equivalent to any standard residential 110/120 volt outlet and can be used as such?

One may be wondering: “how will these rewired outlets help me silence my television commercials?”

The concept could NOT be simpler.

The complexity of The Television Commercial Silencer increases with each stage “inside the box;” but, ”outside the box” the functions and features

increase as well while the complexity decreases for the End User.

you'll want to stick around and check out Stage 5 aka Final Product! Keep checking! Documentation will be updated periodically!

Stage 3: E.g., Configuration Option 1:

Plug the male 3 prong grounded electrical plug from the Stage 3 Television Commercial Silencer into an 110/120 volt standard residential wall outlet—an extension cord may be used if necessary?

The standard rule for extension cords is that the diameter of the extension cord should be the same diameter as the device or larger.

Now that the Stage 3 Television Commercial Silencer has power, press the off button on the hand held radio wave remote control to cut power to all remote controlled outlets at the same time.

Plug the 3.5mm male audio plug from a set of external amplified speakers (similar to computer speakers) into the audio headphone (3.5mm) female jack on your television. Again, an extension cable may be used (3.5mm) –make sure that the power switch on the external speakers is on. YOU can adjust the volume later?

Take the AC adapter from the external amplified speakers and plug it into the top left outlet on the Stage 3 Television Commercial Silencer.

Press button one (1) on the hand held radio wave remote control to power on your television audio.

Instead of grabbing your old "Boom Box," one simply has ONLY to press button two (2) on the hand held radio wave remote control to power on the FM radio inside the two (2) gang electrical work box.

Instead of grabbing your MP3 player, one simply has ONLY to press button three (3) on the hand held radio wave remote control to power on the MP3 player inside the two (2) gang electrical work box.

Walla! NO MORE LISTENING TO TELEVISION COMMERCIALS

Press the off button to turn off all remote controlled outlets at the same time when YOU go to bed --one may also press the sleep button on the radio wave remote control to turn off all remote controlled outlets after a short time period.

One can't say that Stage 3 doesn't "do the job!" However, if Stage 3 doesn't appeal to YOU, try Stage 1, 2 or 4! notice that I didn't include Stage 5 aka Final Product! That's because Stage 5 (Final Product) will appeal to EVERYONE! I'll save one for ya!

P.S. Don't forget that this was just Stage 3, E.g., Configuration Option 1.

Recall that I kept calling the remote control "the radio wave remote control?"

The Stage 3 Television Commercial Silencer's included remote control operates off of low level radio waves NOT infrared waves like standard TV remote controls.

Standard TV infrared remote controls use what are called "line of sight" light waves.

One must point the remote at the TV infrared sensor located somewhere on their TV.

With radio wave remote controls, this is NOT the case. One can silence their television commercials from another room if one prefers?

One may also keep the remote in one's pocket while working in the garage!

Yatzee! What if the remote controlled audio outlets could be managed from one's smartphone and what if one didn't even have to plug external speakers into the Television Commercial Silencer --why NOT "shove" some speakers into the two (2) gang electrical work box as well? ..What if, ..what if, what if one could change the music that the internal MP3 player played! Wonder if all that "stuff" will fit into a two (2) gang electrical work box? --Better go to a three (3) gang.

Oops! Might have given away Stage 4!

More Documentation and Configuration Options on the way. Can’t wait? Hassey Solutions will answer any questions: Contact Us.

Chapter 10 – The Silencer Project Stage 4

Television Commercial Silencer Stage 4 is a standard three (3) gang electrical work box that holds three standard residential electrical outlet receptacles but the outlet cover that was chosen is called 2 and a "blank." The blank just covers the 3rd compartment for future use; but, in my case, the 3rd compartment is where all that extra electronic "stuff" is "shoved." The two (2) standard outlet receptacles are rewired with a wireless receiver module, FM radio module and an MP3 player module inside the work box. In addition, the 3rd compartment allows room for WiFi modules to control the audio outlets via a smartphone APP and since my point of reference moved to wireless, .."shoved" a Bluetooth audio module transmitter in there too --multifunction hand held radio wave remote control included.

When all outlets are off, depressing button one (1) on the hand held remote control provides power to the top left outlet ONLY or depressing button two (2) on the hand held remote control provides power to the bottom left outlet ONLY or depressing button three (3) on the hand held remote control provides power to the top right outlet ONLY. The bottom right outlet is wired always hot and is NOT remote controlled.

It is also NOT wired for low voltage. The always hot outlet is equivalent to any standard residential 110/120 volt outlet and can be used as such.

One may be wondering: “how will these rewired outlets help me silence my television commercials?”

The concept could NOT be simpler.

The complexity of The Television Commercial Silencer increases with each stage “inside the box;” but, ”outside the box” the functions and features increase as well while the complexity decreases for the End User.

you'll want to stick around and check out Stage 5 aka Final Product! Keep checking! Documentation will be updated periodically!

Stage 4: E.g., Configuration Option 1:

Plug the male 3 prong grounded electrical plug from the Stage 4 Television Commercial Silencer into an 110/120 volt standard residential wall outlet—an extension cord may be used if necessary. The standard rule for extension cords is that the diameter of the extension cord should be the same diameter as the device or larger.

Now that the Stage 4 Television Commercial Silencer has power, press the off button on the hand held radio wave remote control to cut power to all remote controlled outlets at the same time. Plug the 3.5mm male audio plug from a set of external amplified

speakers (similar to computer speakers) into the audio headphone (3.5mm) female jack on your television.

Again, an extension cable may be used (3.5mm) or buy a set of bluetooth speakers (still didn't have quite enough room in the electoral work box for the internal speakers)? –Make sure that the power switch on the external speakers is on. YOU can adjust the volume later.

Take the AC adapter from the external amplified speakers and plug it into the top left outlet on the Stage 4 Television Commercial Silencer.

Press button one (1) on the hand held radio wave remote control to power on your television audio or download the smartphone APP for the WiFi modules inside the electrical work box to your smartphone and use your phone as your remote control for the remote controlled audio outlets.

Instead of grabbing your old "Boom Box," one simply has ONLY to press button two (2) on the hand held radio wave remote control to power on the FM radio inside the three (3) gang electrical work box.

Instead of grabbing your MP3 player, one simply has ONLY to press button three (3) on the hand held radio wave remote control to power on the MP3 player inside the three (3) gang electrical work box.

Walla! NO MORE LISTENING TO TELEVISION COMMERCIALS!

Press the off button to turn off all remote controlled outlets at the same time when YOU go to bed --one may also press the sleep button on the radio wave remote control to turn off all remote controlled outlets after a short time period?

One can’t say that Stage 4 doesn’t “do the job!” However, if Stage 4 doesn't appeal to YOU, try Stage 1, 2 or 3! notice that I didn’t include Stage 5 aka Final Product! That’s because Stage 5 (Final Product) will appeal to EVERYONE! I’ll save one for ya!

P.S. Don’t forget that this was just Stage 4, E.g., Configuration Option 1.

Recall that I kept calling the remote control "the radio wave remote control?" The Stage 4 Television Commercial Silencer's included remote control operates off of low level radio waves NOT infrared waves like standard TV remote controls. Standard TV infrared remote controls use what are called "line of sight" light waves.

One must point the remote at the TV infrared sensor located somewhere on their TV. With radio wave remote controls, this is NOT the case. One can silence their television commercials from another room if one prefers.

One may also keep the remote in one's pocket while doing their house work or even while doing the laundry, at the LAUNDRY MAT!!! --The WiFi module's APP that allows for the remote control of the Television Commercial Silencer's audio outlets from one's

smartphone can function per-to-per (P2P) across the Internet. Oh-my! What possibilities!

Eureka! What if ..What if, ..what if people wanted to buy these things? Could these components be packaged in such a way that this device would appeal to just about everyone? Oops! Might have given away Stage 5!

Hence, the birth of the: "**Television Commercial Silencer Electrical Wall Outlet Receptacle Tap**.

You're gonna wanna stick around and see how this ends!

A book can be written on the configuration options available with this little Stage 5 device ...that puts the End User BACK in complete control of what information comes into their home?

More Documentation and Configuration Options on the way. Can't wait?

Hassey Solutions, will answer any questions: Contact Us:

Chapter 11 – The Silencer Project Stage 5

It’s when the end user desires more that the configuration possibilities for the Television Commercial Silencer Electrical Wall Outlet Receptacle Tap become quite extensive. As a matter of truth, It would NOT be possible to cover all of the different audio device configuration possibilities in this application.

This compact unit should allow for the configuration of virtually any end user’s desired audio setup.

(May also use Bluetooth dongle for additional options and functions: e.g., a 3.5mm Bluetooth dongle receiver inserted into the AUX port of the Television Commercial Silencer Electrical Wall Outlet Receptacle Tap will provide features such as: connecting one's smartphone wireless to the Television Commercial Silencer Electrical Wall Outlet Receptacle Tap allowing for playback of one's mp3 collection residing on one's phone, audio books or even online content from YouTube™).

Furthermore, don't forget that one's smartphone can also serve as the handheld remote control for the Television Commercial Silencer Electrical Wall Outlet Receptacle Tap?

Many more configuration options will be included in the Stage 5 Manual. Please “stay tuned!"

P.S. To the manufacturer's, an RF modulator specially designed for the Television Commercial Silencer Electrical Wall Outlet Receptacle Tap will also provide NOT just e.g., YouTube™ audio but also video via the Television Commercial Silencer Electrical Wall Outlet Receptacle Tap.

Thus, YouTube™ audio and video e.g. could be presented to the End User during Television Commercial breaks. [In conclusion, utilizing a "Computer in a Box" such as a "Cubieboard™" possibilities are extensive and the future of the Television Commercial Silencer Electrical Wall Outlet Receptacle Tap is bright!

Also, remember that if one's Television does NOT have built-in Bluetooth capabilities but has a headphone jack, one can plug a Bluetooth transmitter dongle into one's Television headphone jack or various other audio ports on the exterior of one's Television based on manufacturer?

In addition, even the oldest analog televisions that are still using analog to digital converter boxes can still benefit from the Television Commercial Silencer Electrical Wall Outlet Receptacle Tap via RCA cables and/or an RF modulator if need be?

There will be a solution for virtually every audio setup.

The unit is designed from the simple to the complex.

One can plug the unit in and listen to their television through the units' two internal stereo speakers or plug in their own external speakers?

If the end user chooses to use amplified speakers, they would simply plug the 3.5mm plug from their external speakers into the television audio OUT port on the front of the unit and the external amplified speaker's power cord into: addition, if the end user prefers to listen to their television through their television external audio system or home entertainment system, simply plug the respective power cord into: 2. Remote Controlled External Television Audio System Outlet?

The foregoing also applies to: 3. Remote Controlled External Radio/CD Player (BOOM BOX) etc. Audio System Outlet and 4. Remote Controlled External MP3/MP4 Player etc. Audio System Outlet?

The end user can also listen to their favorite MP3/MP4 music "Out of the Box" so to speak by simply plugging in a "FLASH" (USB) drive containing their own music into the front of the unit, if they prefer; or, as with the unit's internal stereo television audio speakers and internal radio, the end user can slide a switch on the front of the unit to turn off respectively each of the unit's internal audio devices entirely and plug in their own, in the respective: Remote Controlled External Audio System Outlet.

(Bluetooth speakers sold separately)

(May also use Bluetooth dongle for additional options and functions: e.g., an 3.5mm Bluetooth dongle receiver inserted into the AUX port of the Television Commercial Silencer Electrical Wall Outlet Receptacle Tap will provide features such as: connecting one's smart phone wirelessly to the Television Commercial Silencer Electrical Wall Outlet Receptacle Tap allowing for playback of one's mp3 collection residing on one's phone, audio books or even online content from YouTube™)?

Furthermore, don't forget that one's smartphone can also serve as the hand held remote control for the Television Commercial Silencer Electrical Wall Outlet Receptacle Tap?

Many more configuration options will be included in the Stage 5 Manual. Please “stay tuned!"

P.S. To the manufacturer’s, an RF modulator specially designed for the Television Commercial Silencer Electrical Wall Outlet Receptacle Tap will also provide NOT just YouTube™ audio but also video via the Television Commercial Silencer Electrical Wall Outlet Receptacle Tap.

Thus, YouTube™ audio and video e.g. could be presented to the End User during Television Commercial breaks?

With your help, Hassey Solutions Television Commercial Silencer's "Packaging" will move from an Electrical Work Box to its new Container as depicted in **Stage 5 User's Manual (Final Product)** that follows:

The new Container's design is similar to a standard multi-outlet electrical wall receptacle tap.

In truth, the official name of Hassey Solutions Final Product submitted to the United States Patent Office is:

"Television Commercial Silencer Electrical Wall Outlet Receptacle Tap.

It will be the same as buying similar items like multi-outlet wall taps or surge protectors in a blister pack that one simply plugs directly into the wall --ONLY this one's a **"SMART" one!**

U.S. Patent No. 10,249,996.

Hassey Solutions is now BSPC Global Corporation and Nelfa's Computer Repair Services, they'll now answer any questions:

BSPC Global Corporation
1401 21st ST #4842
Sacramento, CA
95811
United States

Nelfa's Computer Repair Services
3rd St. BRGY San Miguel, Palmspring
Iligan City
Lanao Del Norte
9200
Philippines

Stage 5 User's Manual
(Final Product)

U.S. Patent No. 10,249,996.
Mock-up

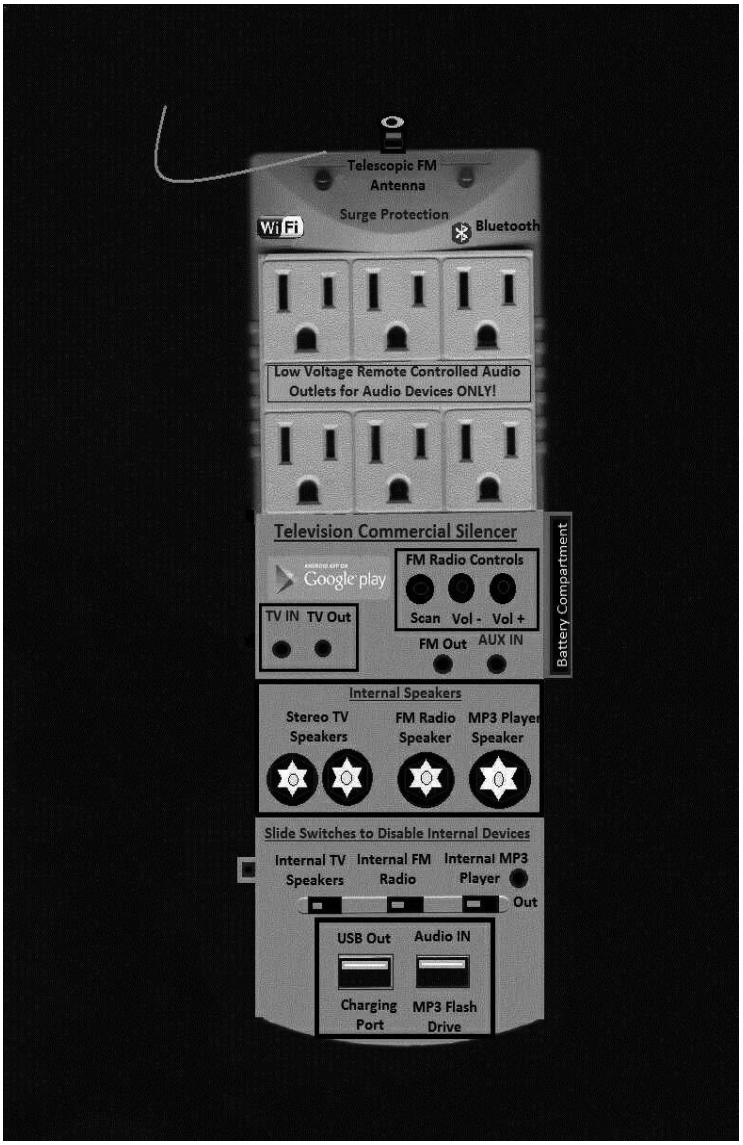

As of May, 2024, the Television Commercial Silencer Electrical Wall Outlet Receptacle Tap has NOT been manufactured.

In addition to a publishing company, BSPC Global Corporation is a tech company specializing in computer repair services, including custom built PCs and servers, as well as web hosting and data and web services.

BSPC Global Corporation is also a light 3D printing manufacturer, specifically to design a 3D model (.STL file) for the Television Commercial Silencer Electrical Wall Outlet Receptacle Tap electronics's enclosure.

Once the .STL ➞le is created of the Television Commercial Silencer Electrical Wall Outlet Receptacle Tap electronics's enclosure, the internal components can be assembled with a CubieBoard ™ or Raspberry Pi ™ at its CORE? -- Embedded technology and open-source hardware with a 3D printed electronics's enclosure, all from BSPC Global Corporation.

Additionally, a free downloadable user's manual, firmware and software updates will be available to all that purchase the Television Commercial Silencer Electrical Wall Outlet Receptacle Tap when available or this book, The Silencer Project: The Power of **"The Night Sun"** ☼ is total eclipse, or the joining of the sun ☼with the moon, ◖that is, The Birth of The "Night Star," * a new entity, and the first "Picture Painting" ☼+◖ = * See The Domestic marine ® Companion Book, The

Furthest and Nearest “Night Stars:” ☼,◖ The Birth of The “Night Star.” *

Also See The Tandem Poetry Series. -- “Equational Poetry,” ™ Engendered Poetry, Invisilife Poetry, and “Picture Paintings” Poetry.

Stay informed at:

https://www.thesilencerproject.com and
https://www.equationalpoetry.com

Chapter 12 – The Silencer Project Provisional Patent

IN THE UNITED STATES PATENT AND TRADEMARK OFFICE

Utility Patent Application (Provisional)

TITLE: Television Commercial Silencer Electrical Wall Outlet Receptacle Tap

INVENTOR: Richard Jon Hassey

BRIEF SUMMARY OF THE INVENTION

Television Commercial Silencer Electrical Wall Outlet Receptacle Tap is a small user friendly device that gives one the convenient ability NOT to "mute" but to "silence" television commercials while at the same time enabling an audio system of their own choosing.

BACKGROUND OF THE INVENTION

In an attempt to eliminate the bombardment of irrelevant commercials that one is exposed to on a daily bases, while staying WITHIN a budget, I rewired a standard one gang electrical outlet receptacle with an 110/120 volt three position toggle switch (ON, OFF, ON). The rewiring allowed for the top outlet to be hot when the toggle was up (ON) and the bottom outlet would be OFF.

Conversely, the bottom outlet would be hot when the toggle was down (ON) and the top outlet would be OFF.

When the toggle switch was flipped to the middle position (OFF), both outlets would be off.

With this newly rewired receptacle, I was able to insert the 3.5mm plug from a set of amplified external speakers into my headphone port on the side of my television. The external speakers were provided power by plugging their AC adapter into the top outlet on my rewired receptacle.

The bottom outlet on my rewired receptacle provided power to my "BOOM BOX."

Flipping my three position toggle switch up turned on my television audio while flipping the toggle switch down would "Silence" my television audio and turn on my "BOOM BOX" radio.-- My rewired receptacle is the origin of the Television Commercial Silencer Electrical Wall Outlet Receptacle Tap.

As time went on and the "benefits" of silencing burdensome television commercials became apparent to me, it was noticed that tethering to a toggle switch was inconvenient. Therefore, I took my same rewired outlet receptacle and I added some more electronics to the work box (Wireless Receiver Module). Adding the wireless receiver module with a hand held remote control allowed for silencing television commercials from anywhere in my home and turning on the radio at the same time.

After noticing that at times there were just as many commercials on the radio as television, I plugged my MP3 player into the bottom outlet of my rewired receptacle instead of my radio. My MP3 player was so small that I thought that it might just fit inside my rewired receptacle work box—it did! The possibilities began to unfold and I was determined to "shove" a radio in my rewired receptacle work box as well.

However, a single gang outlet receptacle work box can ONLY hold so much "stuff." --Went to a two gang and then a three gang outlet receptacle work box, increasing size as space was needed for the components. Added receptacles and wiring and electronics as space permitted.

My one gang, two gang and three gang "Television Commercial Silencers" all work great!

Some of them provide more features and functions then others (My 3 gang work box even has a WiFi module so that the unit's remote controlled outlets can be controlled from a Smartphone (implying, there will be: "An APP for that") but they all do what they were designed to do: Silence television commercials while at the same time turning on NOT just a radio but an audio device of one's own choosing, including a computer's audio system. However, the work boxes started to become bulky and complex; hence, the birth of the user friendly Television Commercial Silencer Electrical Wall Outlet Receptacle Tap.

BRIEF DESCRIPTION OF THE DRAWINGS

Having described the origin, birth and nature of the Television Commercial Silencer Electrical Wall Outlet Receptacle Tap in general terms, reference will now move to the included drawings. These drawings are NOT to scale and consist of ten figures, each on their own page. The figures go from general to specific and provide enough details for any person in the electrical or electronics industry to manufacturer the device.

Indeed, the Television Commercial Silencer Electrical Wall Outlet Receptacle Tap may be embodied in many different forms and should NOT be construed as limited to the embodiments set forth herein; rather, these embodiments are provided so that this disclosure will satisfy applicable legal requirements, wherein:

Figure 1 illustrates the general appearance of what a mass produced unit may look like. The unit would be similar in size to a commonly used multiple outlet or surge protector residential power tap.

Figure 2 illustrates a general side view of such a device. Again, NOT to scale. The width of a mass produced unit would be as small as possible.

Figure 3 illustrates the hand held remote control for the manufactured device and except for scale would look almost like the figure (Inclusion of a WiFi module WITHIN the unit will permit remote control of the unit's audio outlets via a smartphone).

Figure 4 illustrates a breakdown of features and functions by the number. The specific details of each numbered component are provided on a separate page later in this Utility Patent Application (Provisional).

Figure 5 illustrates again a general side view of such a device with emphasis that the manufactured device will be compact and convenient and able to plug into a standard 110/120 volt wall outlet receptacle. --Portable enough to take along on road trips and to motels.

Figure 6 illustrates a breakdown of the functions that the hand held remote control will provide, by the numbers. (Again, with inclusion of a WiFi module WITHIN the unit, the remote controlled outlets may be managed via a smartphone).

Figure 7 illustrates a detailed internal view of the outlet configurations for the Television Commercial Silencer Electrical Wall Outlet Receptacle Tap, showing the wiring diagrams for the three remote controlled outlets and the three always hot outlets as well as how the remote controlled outlets and power supply connect to the remote control receiver module inside the Television Commercial Silencer Electrical Wall Outlet Receptacle Tap.

Figure 8 illustrates the internal view of the components and wiring necessary for the Television Commercial Silencer Electrical Wall Outlet Receptacle Tap to produce its own stereo television sound directly from the unit with the option of utilizing one's own external speakers or audio system of choice.

Figure 9 illustrates the internal view of the components and wiring necessary for the Television Commercial Silencer Electrical Wall Outlet Receptacle Tap to produce its own FM radio sound directly from the unit with the option of utilizing one's own external speakers or audio system of choice, including a personal computer's (PC) audio system.

Figure 10 illustrates the internal view of the components and wiring necessary for the Television Commercial Silencer Electrical Wall Outlet Receptacle Tap to produce its own MP3/MP4 sound directly from the unit with the option of utilizing one's own external speakers or audio system of choice.

DETAILED DESCRIPTION OF THE INVENTION

The terminology used herein is for the purpose of describing particular embodiments ONLY and is NOT intended to be limiting of the Television Commercial Silencer Electrical Wall Outlet Receptacle Tap (Invention).

The exterior of such a plug-in unit should comprise of at least three low voltage remote controlled power outlets specifically designed for external speakers or audio systems.

These low voltage outlets should NOT be considered standard power outlets and shall be labeled as such.

On the other hand, such a plug-in unit should also comprise of at least three standard 110/120 volt power outlets and shall be labeled as such.

The FM radio controls on the exterior of such a unit may vary slightly based on radio module cost, selection and availability during manufacturing but the module selection will NOT limit the units functionality and purpose. The same applies to the MP3/MP4 module, [WiFi module] and various electrical and electronic components, as well as the poly case selection, cut-outs and label printing.

The goal is to place the invention into a compact easy to use practical package for mass production for even a novice to appreciate as well as provide the most extensible set of features and options to put the end

user in complete control. I believe that this package provides said.

The unit is completely self contained and can operate on its own by simply plugging the unit into a standard wall outlet and making one connection. Either plug in a 3.5mm headphone cable from one's television to the 3.5mm audio in port on the unit or plug one's television audio system's power cable into: 2. Remote Controlled External Television Audio System Outlet on the unit (See Television Commercial Silencer Electrical Wall Outlet Receptacle Tap Function Numbering Details).

One will then have the option of silencing television commercials and listening to their favorite radio station instead, WITHOUT any further configuration (other then tuning the internal radio to their favorite station and perhaps extending the external FM radio antenna for adequate reception).

It's when the end user desires more that the configuration possibilities for the Television Commercial Silencer Electrical Wall Outlet Receptacle Tap become quite extensive. As a matter of truth, It would NOT be possible to cover all of the different audio device configuration possibilities in this application. This compact unit should allow for the configuration of virtually any end user's desired audio setup.

The unit is designed from the simple to the complex. One can plug the unit in and listen to their

television through the units' two internal stereo speakers or plug in their own external speakers. If the end user chooses to use amplified speakers, they would simply plug the 3.5mm plug from their external speakers into the television audio OUT port on the front of the unit and the external amplified speaker's power cord into: 2. Remote Controlled External Television Audio System Outlet on the unit. In addition, if the end user prefers to listen to their television through their television external audio system or home entertainment system, simply plug the respective power cord into: 2. Remote Controlled External Television Audio System Outlet.

The foregoing also applies to: 3. Remote Controlled External Radio/CD Player (BOOM BOX) etc. Audio System Outlet and 4. Remote Controlled External MP3/MP4 Player etc. Audio System Outlet.

The end user can also listen to their favorite MP3/MP4 music "Out of the Box" so to speak by simply plugging in a "FLASH" (USB) drive containing their own music into the front of the unit, if they prefer; or, as with the unit's internal stereo television audio speakers and internal radio, the end user can slide a switch on the front of the unit to turn off respectively each of the unit's internal audio devices entirely and plug in their own, in the respective: Remote Controlled External Audio System Outlet.

CLAIMS

The terminology used herein is for the purpose of describing particular embodiments ONLY and is NOT intended to be limiting of the Television Commercial Silencer Electrical Wall Outlet Receptacle Tap (Invention).

My one gang, two gang and three gang "Television Commercial Silencers" all work great!

Some of them provide more features and functions then others (My 3 gang work box even has a WiFi module so that the unit's remote controlled outlets can be controlled from a Smartphone (implying, there will be: "An APP for that") but they all do what they were designed to do: Silence television commercials while at the same time turning on NOT just a radio but an audio device of one's own choosing, including a computer's audio system. However, the work boxes started to become bulky and complex; hence, the birth of the user friendly Television Commercial Silencer Electrical Wall Outlet Receptacle Tap.

ABSTRACT

In an attempt to eliminate the bombardment of irrelevant commercials that one is exposed to on a daily bases, while staying WITHIN a budget, I rewired a standard one gang electrical outlet receptacle with an 110/120 volt three position toggle switch (ON, OFF, ON).

The rewiring allowed for the top outlet to be hot when the toggle was up (ON) and the bottom outlet would be OFF. Conversely, the bottom outlet would be hot when the toggle was down (ON) and the top outlet would be OFF. When the toggle switch was flipped to the middle position (OFF), both outlets would be off.

With this newly rewired receptacle, I was able to insert the 3.5mm plug from a set of amplified external speakers into my headphone port on the side of my television.

The external speakers were provided power by plugging their AC adapter into the top outlet on my rewired receptacle.

The bottom outlet on my rewired receptacle provided power to my "BOOM BOX." Flipping my three position toggle switch up turned on my television audio while flipping the toggle switch down would "Silence" my television audio and turn on my "BOOM BOX" radio.-- My rewired receptacle is the origin of the Television Commercial Silencer Electrical Wall Outlet Receptacle Tap.

As time went on and the "benefits" of silencing burdensome television commercials became apparent to me, it was noticed that tethering to a toggle switch was inconvenient.

Therefore, I took my same rewired outlet receptacle and I added some more electronics to the work box (Wireless Receiver Module). Adding the wireless receiver module with a hand held remote control allowed for silencing television commercials from anywhere in my home and turning on the radio at the same time.

After noticing that at times there were just as many commercials on the radio as television, I plugged my MP3 player into the bottom outlet of my rewired receptacle instead of my radio.

My MP3 player was so small that I thought that it might just fit inside my rewired receptacle work box—it did! The possibilities began to unfold and I was determined to "shove" a radio in my rewired receptacle work box as well.

However, a single gang outlet receptacle work box can ONLY hold so much "stuff." --Went to a two gang and then a three gang outlet receptacle work box, increasing size as space was needed for the components. Added receptacles and wiring and electronics as space permitted.

My one gang, two gang and three gang "Television Commercial Silencers" all work great!

Some of them provide more features and functions then others (My 3 gang work box even has a WiFi module so that the unit's remote controlled outlets can be controlled from a Smartphone (implying, there will be: "An APP for that") but they all do what they were designed to do: Silence television commercials while at the same time turning on NOT just a radio but an audio device of one's own choosing, including a computer's audio system.

However, the work boxes started to become bulky and complex; hence, the birth of the user friendly Television Commercial Silencer Electrical Wall Outlet Receptacle Tap.

Chapter 13 – The Silencer Project
Provisional Patent Figures 1-10

Figure 1 Television Commercial Silencer Electrical Wall Outlet Receptacle Tap.

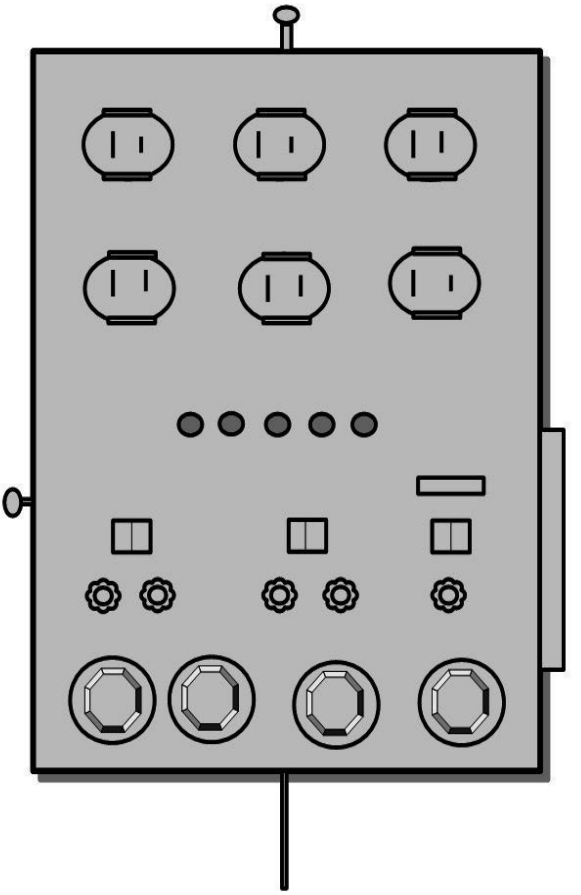

Figure 2

Side View of Television Commercial Silencer
Electrical Wall Outlet Tap.

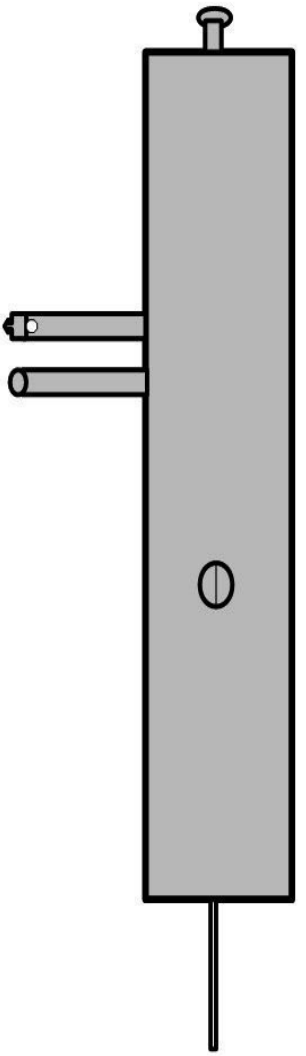

Figure 3

Remote Control for Television Commercial Silencer Wall Outlet Receptacle tap.

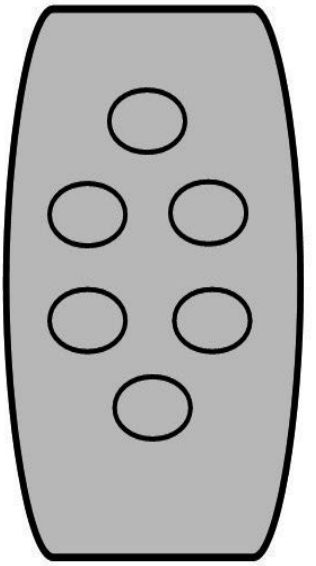

Figure 4 Television Commercial Silencer Electrical Wall Outlet Receptacle Tap Function Numbering.

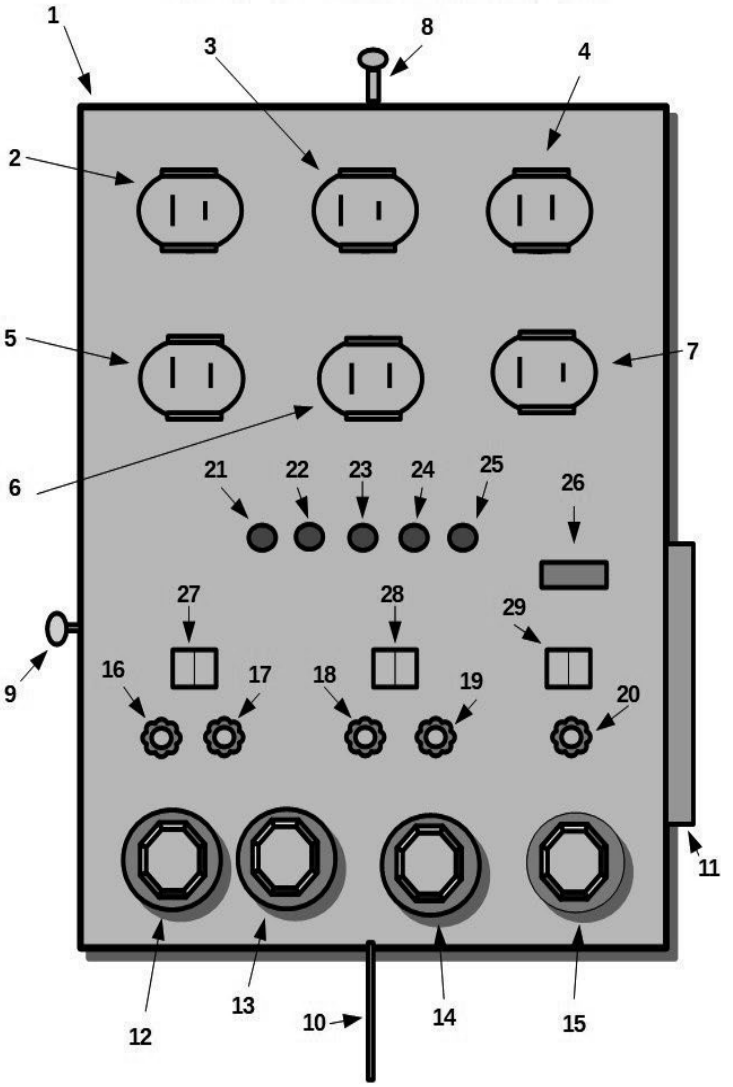

Figure 5

Side View of Television Commercial Silencer
Electrical Wall Outlet Tap.

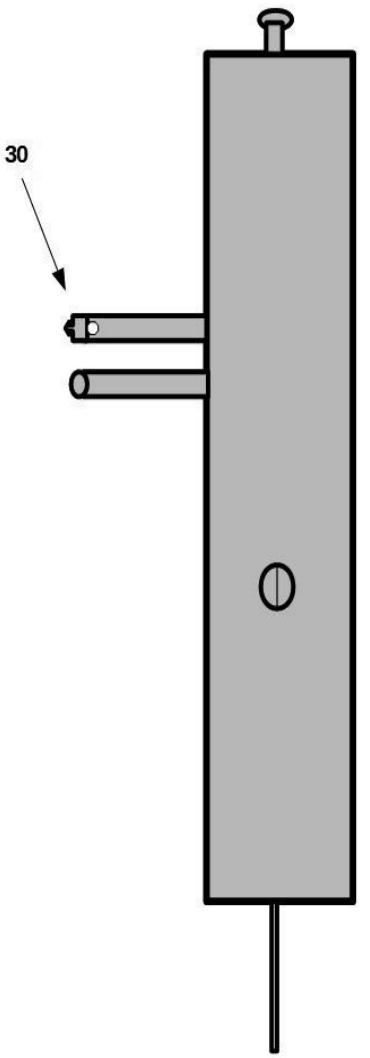

Figure 6

Remote Control Button Assignments for Television Commercial Silencer Wall Outlet Receptacle tap.

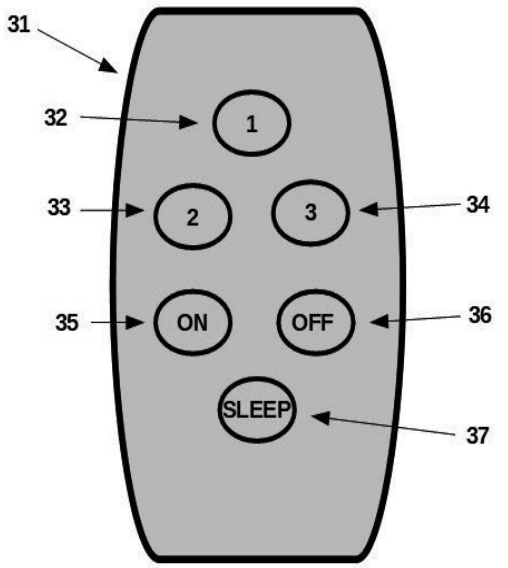

Figure 7

Internal View of Outlet Configurations
Top 3 Outlets Remote Controlled; Bottom 3 Outlets Always Hot.

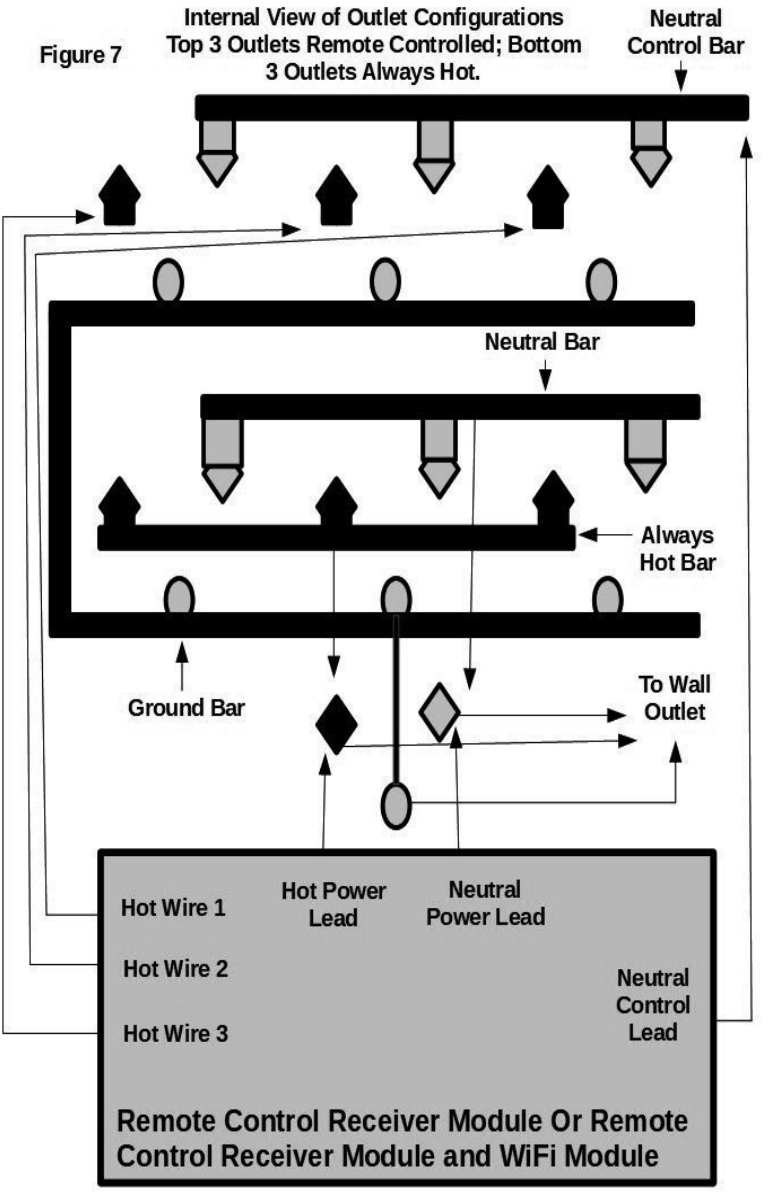

Figure 8

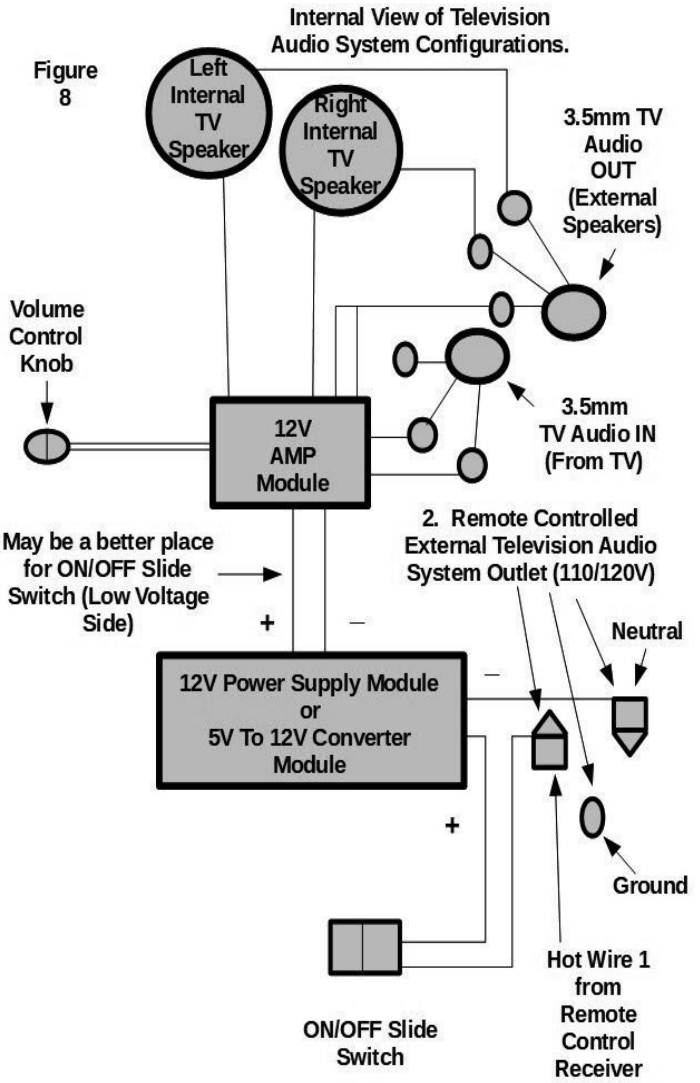
Internal View of Television Audio System Configurations.
Left Internal TV Speaker
Right Internal TV Speaker
3.5mm TV Audio OUT (External Speakers)
Volume Control Knob
12V AMP Module
3.5mm TV Audio IN (From TV)
May be a better place for ON/OFF Slide Switch (Low Voltage Side)
+
–
2. Remote Controlled External Television Audio System Outlet (110/120V)
Neutral
12V Power Supply Module or 5V To 12V Converter Module
–
+
Ground
Hot Wire 1 from Remote Control Receiver
ON/OFF Slide Switch

Figure 9

Internal View of FM Radio Audio System Configurations.

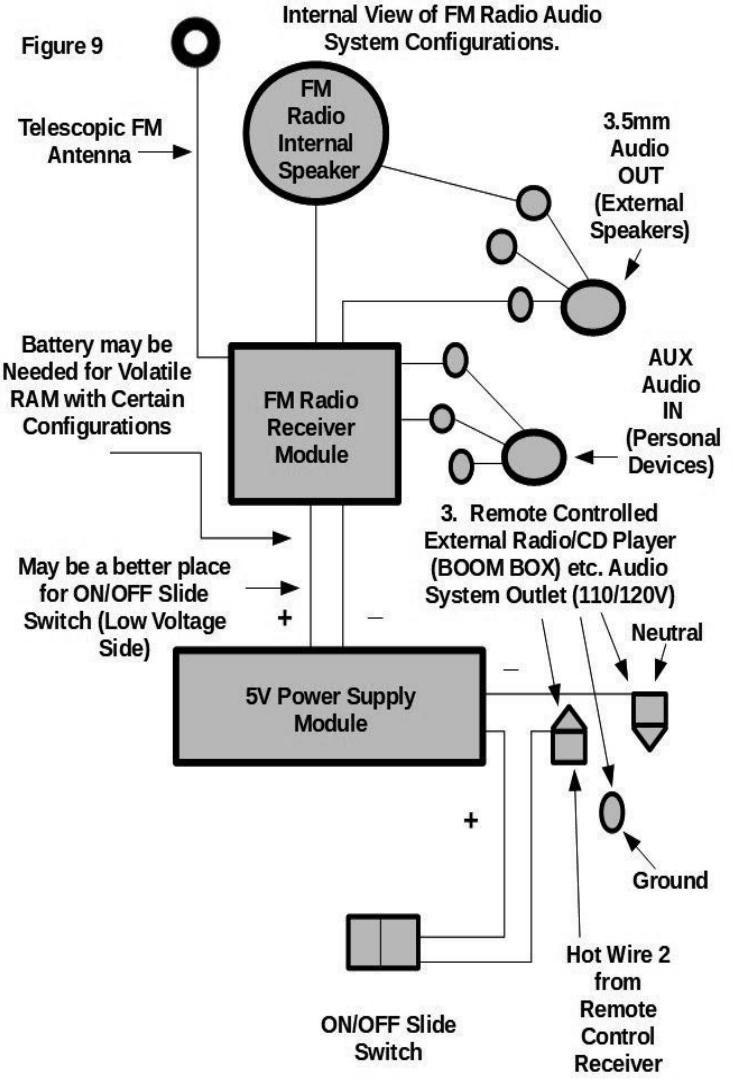

Internal View of MP3/MP4 Player Audio System Configurations.

Figure 10

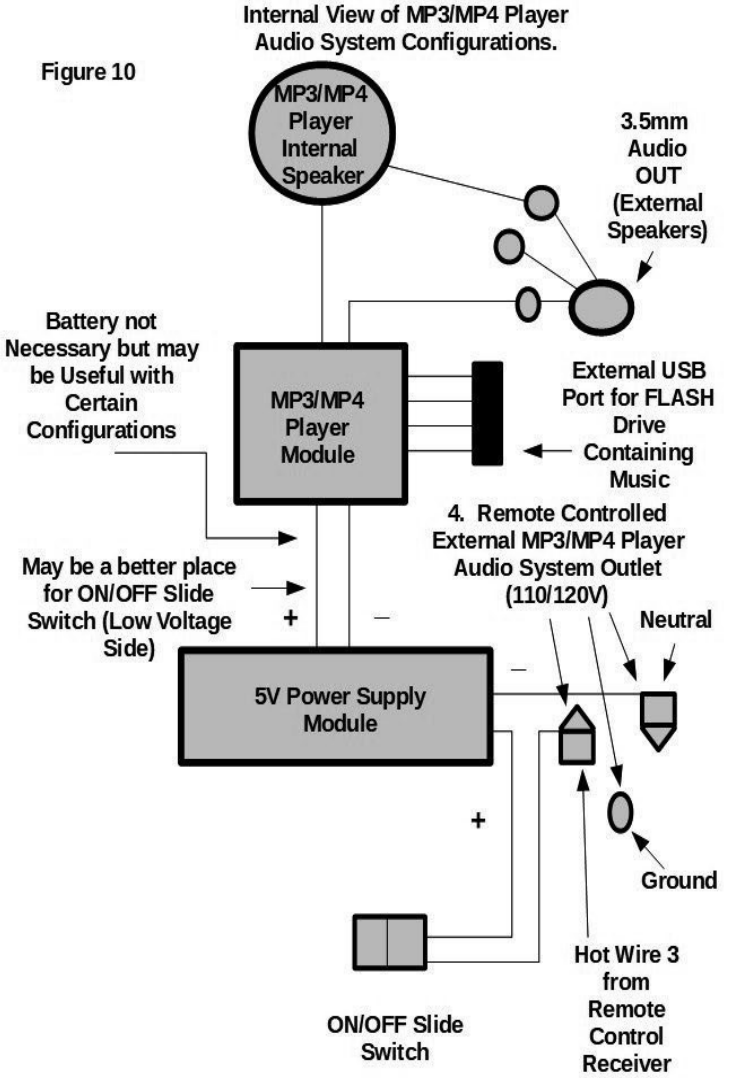

Television Commercial Silencer Electrical Wall Outlet Receptacle Tap Function Numbering Details

1. Television Commercial Silencer Electrical Wall Outlet Receptacle Tap.

2. Remote Controlled External Television Audio System. Outlet

3. Remote Controlled External Radio/CD (Player/Radio/BOOM BOX) etc.

Audio System Outlet.

4. Remote Controlled External MP3/MP4 Player Audio System Outlet.

5. Always on (HOT) Standard 110/120 Volt Outlet/

6. Always on (HOT) Standard 110/120 Volt Outlet.

7. Always on (HOT) Standard 110/120 Volt Outlet.

8. External Telescopic FM Radio Antenna for Internal FM. Radio

9. External Volume Control Knob for Internal Television Audio Stereo Speakers.

10. External Remote Control Receiver Antenna.

11. External Replaceable Battery(s) Compartment.

12. Internal Left Speaker for Television Stereo Audio.

13. Internal Right Speaker for Television Stereo Audio.

14. Internal Speaker for Internal FM Radio.

15. Internal Speaker for Internal MP3/MP4 Player.

16. 3.5 mm Television Audio In Port.

17. 3.5 mm Television Audio Out Port For (External Speakers).

18. 3.5 mm Internal FM Radio AUX In Port.

19. 3.5 mm Internal FM Radio Audio Out Port For (External Speakers).

20. 3.5 mm Internal M3P/MP4 Player Audio Out Port For (External Speakers).

21. Internal FM Radio Power On Button.

22. Internal FM Radio Volume Down Button.

23. Internal FM Radio Volume Up Butt. on

24. Internal FM Radio Seek Down Button

25. Internal FM Radio Seek UP Button.

26. Internal MP3/MP4 Player USB In Port For FLASH Drive Containing Music.

27. External Slide O/N OFF Switch for Internal Television Audio Stereo Speakers.

28. External Slide O/N OFF Switch for Internal Radio.

29. External Slide O/N OFF Switch for Internal MP3/MP4 Player.

30. Standard 110/120 Volt Grounded Plug for Standard Residential Wall Outlet Receptacle.

31. Wireless Remote Control For Outlets Numbers, For Internal and External Audio Systems Remote Control

32. Remote Control Button (To Power ON/ OFF External Television Audio System (Or Internal Television Stereo Speakers

33. Remote Control Button (2) To Power ON/ OFF External Radio/CD Player (BOOM BOX) etc. Audio Systems Or Internal Radio).

34. Remote Control Button (3) To Power ON/ OFF External M3/PMP4 Player etc. Audio Systems (Or Internal MP3/MP4 Player).

35. ALL Outlets ON Button.

36. ALL Outlets OFF Button.

37. SLEEP Button. ALL Outlets OFF After 15 Min..

38. Television Commercial Silencer Electrical Wall Outlet Receptacle Tap.

39. Remote Controlled, WiFi enabled, Voice Controlled External Television Audio System Outlet.

40. Remote Controlled WiFi enabled, Voice Controlled External Radio/CD Player (BOOM BOX) etc. Audio System Outlet.

41. Remote Controlled, WiFi enabled, Voice Controlled External MP3/MP4 Player Audio System Outlet.

42. Always on (HOT) Standard 110/120 Volt Outlet or WiFi enabled Power Audio System Outlet.

43. Always on (HOT) Standard 110/120 Volt Outlet or WiFi enabled Power Audio System Outlet.

44. Always on (HOT) Standard 110/120 Volt Outlet or WiFi enabled Power Audio System Outlet.

45. External Telescopic FM Radio Antenna for Internal FM Radio.

46. External Volume Control Knob (Amplifier) for Internal Television Audio Stereo Speakers.

47. External Remote Control Receiver Antenna.

48. External Replaceable Battery(s)' Compartment.

49. Internal Left Speaker for Television Stereo Audio.

50. Internal Right Speaker for Television Stereo Audio.

51. Internal Speaker for Internal FM Radio.

52. Internal Speaker for Internal MP3/MP4 Player.

53. 3.5 mm Television Audio In Port for wired connection to TV or Bluetooth RX dongle.

54. 3.5 mm Television Audio Out Port For (External Speakers) or Bluetooth TX dongle.

55. 3.5 mm Internal FM Radio AUX In Port for external devices or Bluetooth RX dongle.

56. 3.5 mm Internal FM Radio Audio Out Port For (External Speakers) or Bluetooth TX dongle.

57. 3.5 mm Internal MP3/MP4 Player Audio Out Port For (External Speakers) or Bluetooth TX dongle.

58. Internal FM Radio Power On Button.

Chapter 14 – The Silencer Project NON Provisional Patent

IN THE UNITED STATES PATENT AND TRADEMARK OFFICE

Utility Patent Application (NON Provisional)

TITLE: Television Commercial Silencer Electrical Wall Outlet Receptacle Tap

INVENTOR: Richard Jon Hassey

BRIEF SUMMARY OF THE INVENTION

Television Commercial Silencer Electrical Wall Outlet Receptacle Tap is a small user friendly device that gives one the convenient ability NOT to “mute” but to “silence” television commercials while at the same time enabling an audio system of their own choosing.

BACKGROUND OF THE INVENTION

In an attempt to eliminate the bombardment of irrelevant commercials that one is exposed to on a daily bases, while staying WITHIN a budget, I rewired a standard one gang electrical outlet receptacle with an 110/120 volt three position toggle switch (ON, OFF, ON).

The rewiring allowed for the top outlet to be hot when the toggle was up (ON) and the bottom outlet would be OFF. Conversely, the bottom outlet would be hot when the toggle was down (ON) and the top outlet would be OFF. When the toggle switch was flipped to the middle position (OFF), both outlets would be off.

With this newly rewired receptacle, I was able to insert the 3.5mm plug from a set of amplified external speakers into my headphone port on the side of my television. The external speakers were provided power by plugging their AC adapter into the top outlet on my rewired receptacle.

The bottom outlet on my rewired receptacle provided power to my “BOOM BOX.”

Flipping my three position toggle switch up turned on my television audio while flipping the toggle switch down would “Silence” my television audio and turn on my “BOOM BOX” radio. – My rewired receptacle is the origin of the Television Commercial Silencer Electrical Wall Outlet Receptacle Tap.

As time went on and the “benefits” of silencing burdensome television commercials became apparent to me, it was noticed that tethering to a toggle switch was inconvenient.

Therefore, I took my same rewired outlet receptacle and I added some more electronics to the work box (Wireless Receiver Module). Adding the wireless receiver module with a hand held remote control allowed for silencing television commercials from anywhere in my home and turning on the radio at the same time.

After noticing that at times there were just as many commercials on the radio as television, I plugged my MP3 player into the bottom outlet of my rewired receptacle instead of my radio. My MP3 player was so small that I thought that it might just fit inside my rewired receptacle work box—it did! The possibilities began to unfold and I was determined to “shove” a radio in my rewired receptacle work box as well.

However, a single gang outlet receptacle work box can ONLY hold so much “stuff.” – Went to a two gang and then a three gang outlet receptacle work box, increasing size as space was needed for the components. Added receptacles and wiring and electronics as space permitted.

My one gang, two gang and three gang “Television Commercial Silencers” all work great!

Some of them provide more features and functions then others (My 3 gang work box even has

WiFi modules so that the unit's remote controlled outlets can be controlled from a Smartphone (implying, there will be: "An APP for that" – Inclusion of the Voice Commands API during APP development will allow for Voice Control of the Television Commercial Silencer Electrical Wall Outlet Receptacle Tap) but they all do what they were designed to do: Silence television commercials while at the same time turning on NOT just a radio but an audio device of one's own choosing, including a computer's audio system. However, the work boxes started to become bulky and complex; hence, the birth of the user friendly Television Commercial Silencer Electrical Wall Outlet Receptacle Tap.

BRIEF DESCRIPTION OF THE DRAWINGS

Having described the origin, birth and nature of the Television Commercial Silencer Electrical Wall Outlet Receptacle Tap in general terms, reference will now move to the included drawings. These drawings are NOT to scale and consist of ten figures, each on their own page. The figures go from general to specific and provide enough details for any person in the electrical or electronics industry to manufacturer the device. Indeed, the Television Commercial Silencer Electrical Wall Outlet Receptacle Tap may be embodied in many different forms and should NOT be construed as limited to the embodiment's set forth herein; rather, these embodiment's are provided so that this disclosure will satisfy applicable legal requirements, wherein:

Figure 1 illustrates the general appearance of what a mass produced unit may look like. The unit would be similar in size to a commonly used multiple outlet or surge protector residential power tap.

Figure 2 illustrates a general side view of such a device. Again, NOT to scale. The width of a mass produced unit would be as small as possible.

Figure 3 illustrates the hand held remote control for the manufactured device and except for scale would look almost like the figure (Inclusion of WiFi modules WITHIN the unit will permit remote control of the unit’s audio outlets via a smartphone).

Figure 4 illustrates a breakdown of features and functions by the number.

The specific details of each numbered component are provided on a separate page later in this Utility Patent Application (NON Provisional).

Figure 5 illustrates again a general side view of such a device with emphasis that the manufactured device will be compact and convenient and able to plug into a standard 110/120 volt wall outlet receptacle. – Portable enough to take along on road trips and to motels.

Figure 6 illustrates a breakdown of the functions that the hand held remote control will provide, by the numbers. (Again, with inclusion of WiFi modules WITHIN the unit, the remote controlled outlets may be managed via a smartphone. – Inclusion of the Voice Commands API and technology such as “Bluetooth Smart” during APP development will allow for Voice Control and Auto Detection and Configuration of audio devices near by the Television Commercial Silencer Electrical Wall Outlet Receptacle Tap).

Figure 7 illustrates a detailed internal view of the outlet configurations for the Television Commercial Silencer Electrical Wall Outlet Receptacle Tap, showing the wiring diagrams for the three remote controlled outlets and the three always hot or WiFi enabled outlets or Voice enabled outlets (implying, there will be: “An APP for that” – Inclusion of the Voice Commands API during APP development will allow for Voice Control of the Television Commercial Silencer Electrical Wall Outlet

Receptacle Tap) as well as how the remote controlled outlets and power supply connect to the remote control, WiFi control or Voice control receiver module(s) inside the Television Commercial Silencer Electrical Wall Outlet Receptacle Tap.

Figure 8 illustrates the internal view of the components and wiring necessary for the Television Commercial Silencer Electrical Wall Outlet Receptacle Tap to produce its own stereo television sound via 3.5mm ports directly from the unit with the option of utilizing one's own external speakers or audio system of choice.

Figure 9 illustrates the internal view of the components and wiring necessary for the Television Commercial Silencer Electrical Wall Outlet Receptacle Tap to produce its own FM radio sound directly from the unit with the option of utilizing one's own external speakers or audio system of choice, including a personal computer's (PC) audio system.

Figure 10 illustrates the internal view of the components and wiring necessary for the Television Commercial Silencer Electrical Wall Outlet Receptacle Tap to produce its own MP3/MP4 sound directly from the unit with the option of utilizing one's own external speakers or audio system of choice.

Figure 11 illustrates the internal view of the components and wiring necessary for the Television Commercial Silencer Electrical Wall Outlet Receptacle Tap to produce its own stereo television sound via RCA and Component Audio IN Ports directly from the unit

with the option of utilizing one’s own external speakers or audio system of choice.

Figure 12 illustrates the internal view of the components and wiring necessary for the Television Commercial Silencer Electrical Wall Outlet Receptacle Tap to produce and pass through its own stereo television sound via RCA and Component Audio OUT Ports directly from the unit with the option of utilizing one’s own external speakers or audio system of choice.

Figure 13 illustrates the internal view of the components and wiring necessary for the Television Commercial Silencer Electrical Wall Outlet Receptacle Tap to produce and pass through its own stereo television sound via Optical Audio IN/Out Ports directly from the unit with the option of utilizing one’s own external speakers or audio system of choice.

DETAILED DESCRIPTION OF THE INVENTION

The terminology used herein is for the purpose of describing particular embodiment's ONLY and is NOT intended to be limiting of the Television Commercial Silencer Electrical Wall Outlet Receptacle Tap (Invention).

The exterior of such a plug-in unit should comprise of at least three low voltage remote controlled power outlets specifically designed for external speakers or audio systems. These low voltage outlets should NOT be considered standard power outlets and shall be labeled as such. On the other hand, such a plug-in unit should also comprise of at least three standard 110/120 volt and/or WiFi enabled power outlets and shall be labeled as such.

The FM radio controls on the exterior of such a unit may vary slightly based on radio module cost, selection and availability during manufacturing but the module selection will NOT limit the units functionality and purpose. The same applies to the MP3/MP4 module, [Component and Composite Audio Modules], [Optical Audio Modules], [WiFi modules], [Bluetooth Modules], [Voice Control Modules] and various electrical and electronic components, as well as the poly case selection, cutouts and label printing.

The goal is to place the invention into a compact easy to use practical package for mass production for even a novice to appreciate as well as provide the most extensible set of features and options to put the end

user in complete control. I believe that this package provides said.

The unit is completely self contained and can operate on its own by simply plugging the unit into a standard wall outlet and making one connection or Wireless via Bluetooth. Either plug in a 3.5mm headphone cable from one's television to the 3.5mm audio in port on the unit or utilize one of the multiple available audio ports on the exterior of the unit or plug one's television audio system's power cable into: 2. Remote Controlled External Television Audio System Outlet on the unit (See Television Commercial Silencer Electrical Wall Outlet Receptacle Tap Function Numbering Details). – On Bluetooth enabled Televisions or via on-board Bluetooth or external dongle, no wired connection is required. (Bluetooth speakers sold separately).

One will then have the option of silencing television commercials and listening to their favorite radio station instead, WITHOUT any further configuration (other then tuning the internal radio to their favorite station and perhaps extending the external FM radio antenna for adequate reception).

It's when the end user desires more that the configuration possibilities for the Television Commercial Silencer Electrical Wall Outlet Receptacle Tap become quite extensive. As a matter of truth, It would NOT be possible to cover all of the different audio device configuration possibilities in this application. This

compact unit should allow for the configuration of virtually any end user’s desired audio setup?

(May also use Bluetooth dongle for additional options and functions: e.g., a 3.5mm Bluetooth dongle receiver inserted into the AUX port of the Television Commercial Silencer Electrical Wall Outlet Receptacle Tap will provide features such as: connecting one's smartphone wireless to the Television Commercial Silencer Electrical Wall Outlet Receptacle Tap allowing for playback of one's mp3 collection residing on one's phone, audio books or even online content from YouTube™)?

Furthermore, don't forget that one's smartphone can also serve as the hand held remote control for the Television Commercial Silencer Electrical Wall Outlet Receptacle Tap. Many more configuration options will be included in the Stage 5 Manual. Please stay "tuned!"

P.S. To the manufacturer’s, an RF modulator specially designed for the Television Commercial Silencer Electrical Wall Outlet Receptacle Tap will also provide NOT just e.g., YouTube™ audio but also video via the Television Commercial Silencer Electrical Wall Outlet Receptacle Tap.

Thus, YouTube™ audio and video e.g. could be presented to the End User during Television Commercial breaks. [In conclusion, utilizing a “Computer in a Box” such as a “Cubieboard™” possibilities are extensive and the future of the

Television Commercial Silencer Electrical Wall Outlet Receptacle Tap is bright!

Also, remember that if one's Television does NOT have built-in Bluetooth capabilities but has a headphone jack, one can plug a Bluetooth transmitter dongle into one's Television headphone jack or various other audio ports on the exterior of one’s Television based on manufacturer. In addition, even the oldest analog televisions that are still using analog to digital converter boxes can still benefit from the Television Commercial Silencer Electrical Wall Outlet Receptacle Tap via RCA cables and/or an RF modulator if need be.

There will be a solution for virtually every audio setup.

The unit is designed from the simple to the complex. One can plug the unit in and listen to their television through the units’ two internal stereo speakers or plug in their own external speakers. If the end user chooses to use amplified speakers, they would simply plug the 3.5mm plug from their external speakers into the television audio OUT port on the front of the unit and the external amplified speaker’s power cord into: addition, if the end user prefers to listen to their television through their television external audio system or home entertainment system, simply plug the respective power cord into: 2. Remote Controlled External Television Audio System Outlet.

The foregoing also applies to: 3. Remote Controlled External Radio/CD Player (BOOM BOX) etc.

Audio System Outlet and 4. Remote Controlled External MP3/MP4 Player etc. Audio System Outlet.

The end user can also listen to their favorite MP3/MP4 music “Out of the Box” so to speak by simply plugging in a “FLASH” (USB) drive containing their own music into the front of the unit, if they prefer; or, as with the unit’s internal stereo television audio speakers and internal radio, the end user can slide a switch on the front of the unit to turn off respectively each of the unit’s internal audio devices entirely and plug in their own, in the respective: Remote Controlled External Audio System Outlet.

CLAIMS

The terminology used herein is for the purpose of describing particular embodiment's ONLY and is NOT intended to be limiting of the Television Commercial Silencer Electrical Wall Outlet Receptacle Tap (Invention).

My one gang, two gang and three gang “Television Commercial Silencers” all work great! Some of them provide more features and functions then others (My 3 gang work box even has WiFi modules so that the unit’s remote controlled outlets can be controlled from a Smartphone (implying, there will be: “An APP for that” – Inclusion of the Voice Commands API during APP development will allow for Voice Control of the Television Commercial Silencer Electrical Wall Outlet Tap) [Existing Apps are extensible with firmware updates and will become feature rich including triggers and scene selections. The possibilities are endless with existing APPs or an entirely re engineered APP specifically designed for the Television Commercial Silencer Electrical Wall Outlet Receptacle Tap] but they all do and will do what they were, are and will be designed to do: Allow the End User the choice to Silence television commercials while at the same time turn on NOT just a radio but an audio device of one’s own choosing, including a computer’s audio system. However, the work boxes started to become bulky and complex; hence, the birth of the user friendly Television Commercial Silencer Electrical Wall Outlet Receptacle Tap.

ABSTRACT

I rewired a standard one gang electrical outlet receptacle with an 110/120 volt three position toggle switch (ON, OFF, ON). The rewiring allowed for the top outlet to be hot when the toggle was up (ON) and the bottom outlet would be OFF. Conversely, the bottom outlet would be hot when the toggle was down (ON) and the top outlet would be OFF. When the toggle switch was flipped to the middle position (OFF), both outlets would be off. Plugged a 3.5mm plug from a set of amplified external speakers into my headphone port on the side of my television. The external speakers were plugged into the top outlet on my rewired receptacle. The bottom outlet on my rewired receptacle provided power to my “BOOM BOX.” Flipping my three position toggle switch up turned on my television audio while flipping the toggle switch down would “Silence” my television audio and turn on my “BOOM BOX” radio. – My rewired receptacle is the origin of the Television Commercial Silencer Electrical Wall Outlet Receptacle Tap.

Chapter 15 – The Silencer Project
NON Provisional Patent Figures 1-13

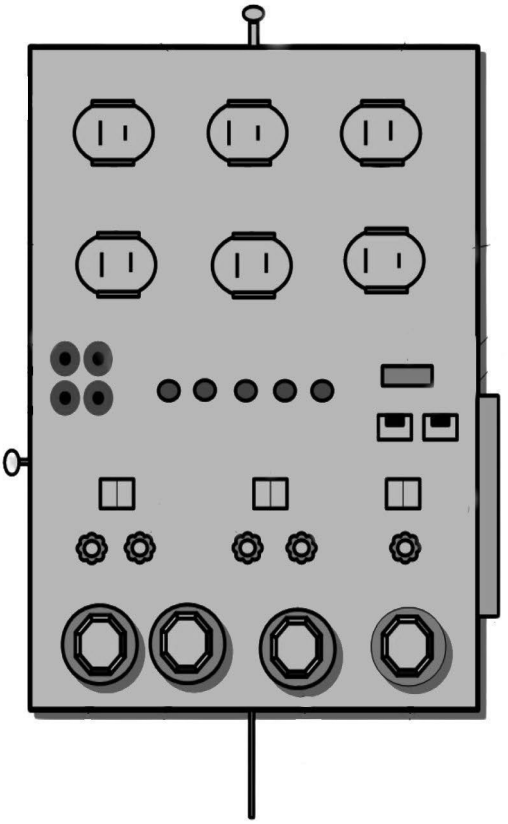

Figure 2

Side View of Television Commercial Silencer Electrical Wall Outlet Tap.

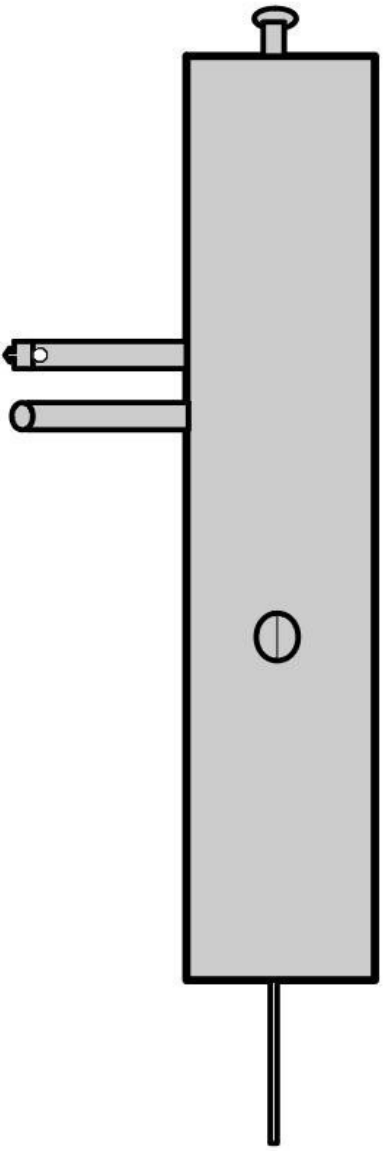

Figure 3

Remote Control for Television Commercial Silencer Wall Outlet Receptacle tap.

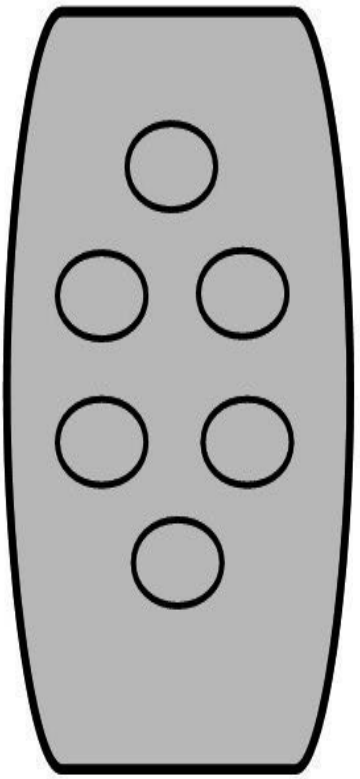

Figure 4 Television Commercial Silencer Electrical Wall Outlet Receptacle Tap Function Numbering.

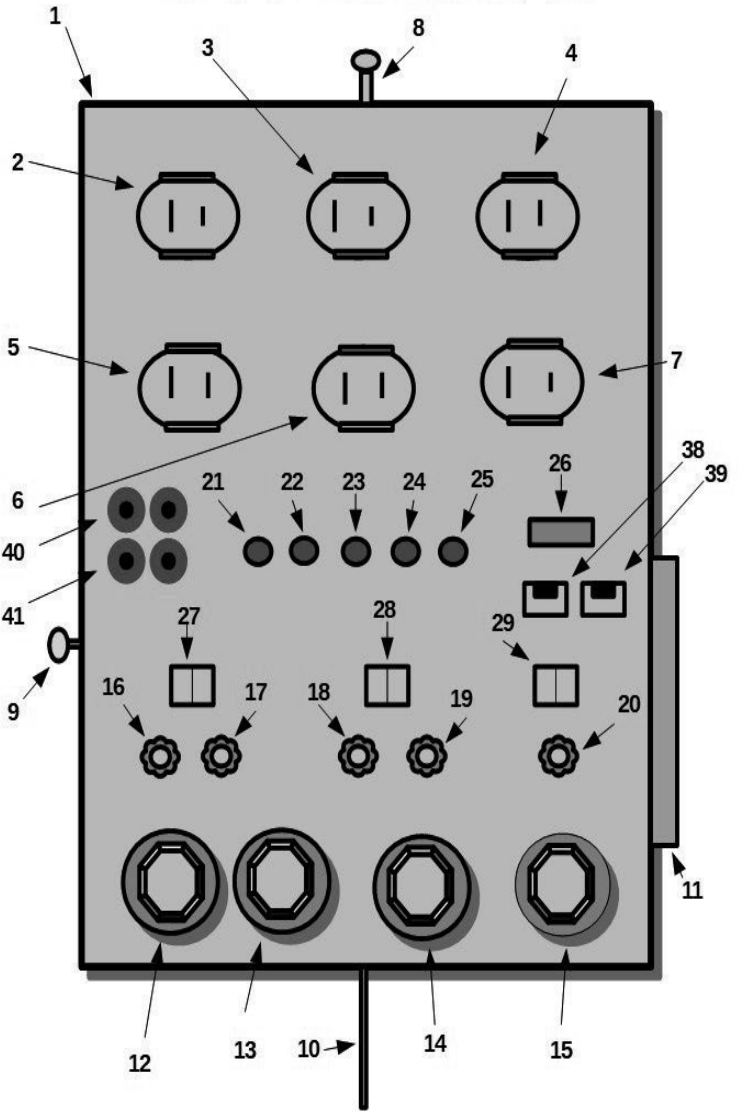

Figure 5

Side View of Television Commercial Silencer
Electrical Wall Outlet Tap.

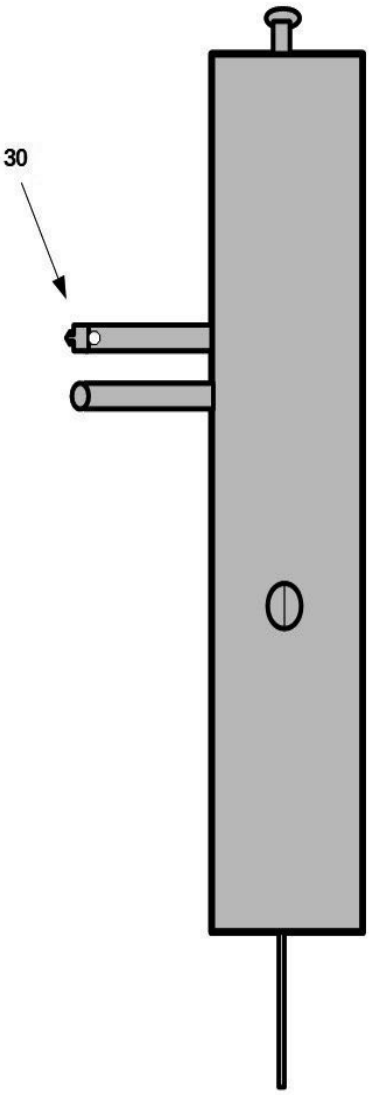

Figure 6

Remote Control Button Assignments for Television Commercial Silencer Wall Outlet Receptacle tap.

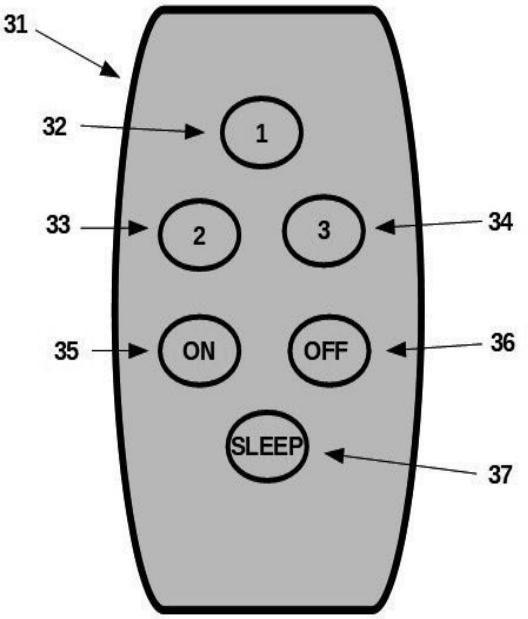

Figure 7 Internal View of Outlet Configurations
Top 3 Outlets Remote Controlled; Bottom 3 Outlets Always Hot or WiFi Module Controlled

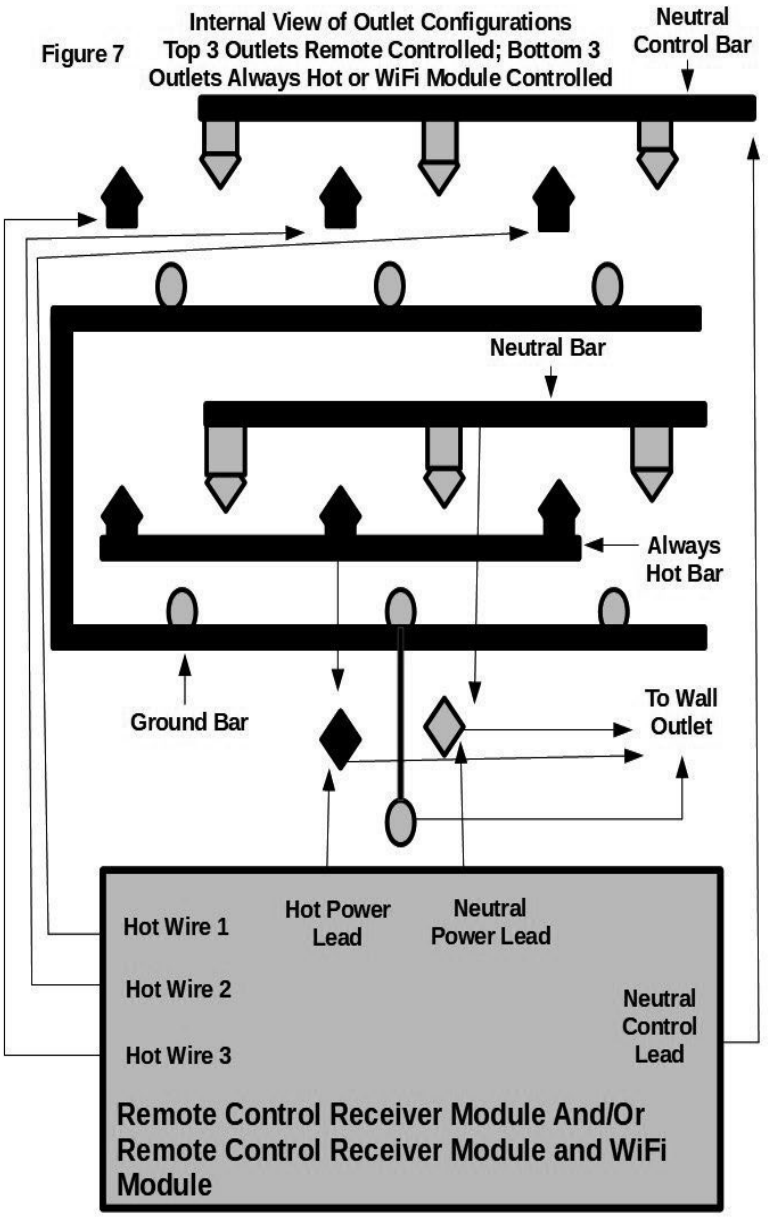

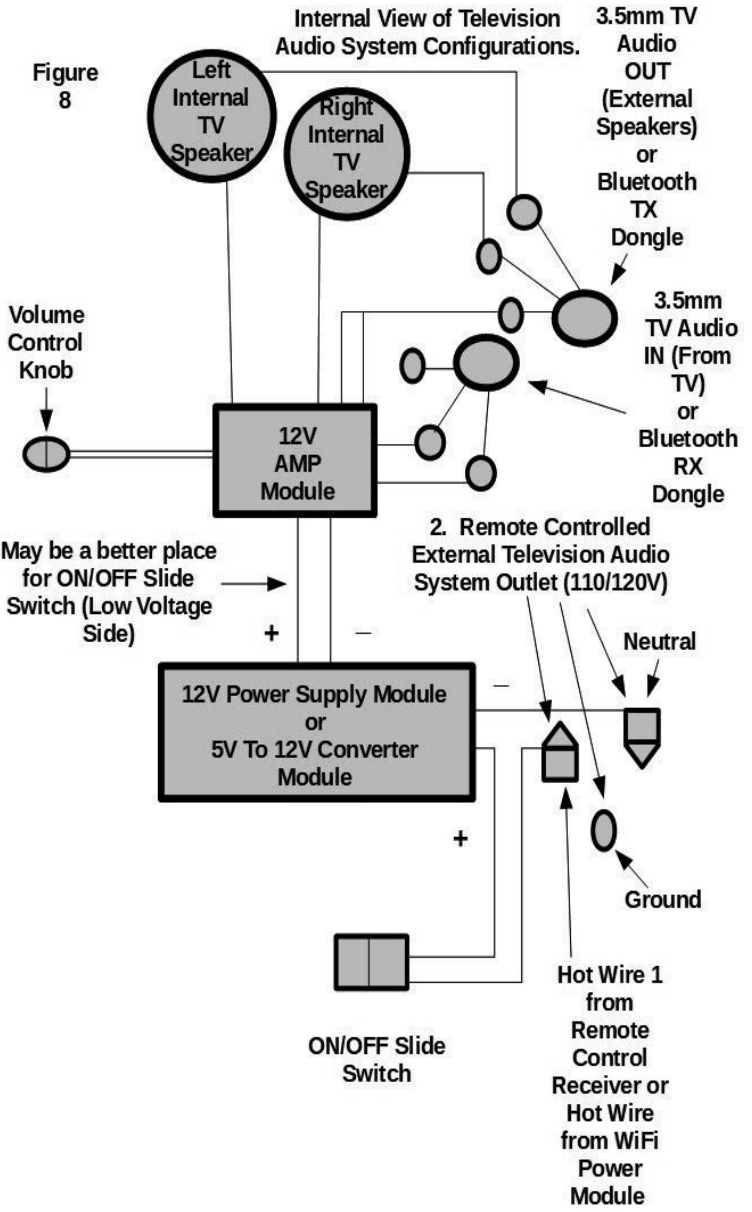
Figure 8
Internal View of Television Audio System Configurations.
Left Internal TV Speaker
Right Internal TV Speaker
3.5mm TV Audio OUT (External Speakers) or Bluetooth TX Dongle
3.5mm TV Audio IN (From TV) or Bluetooth RX Dongle
Volume Control Knob
12V AMP Module
May be a better place for ON/OFF Slide Switch (Low Voltage Side)
2. Remote Controlled External Television Audio System Outlet (110/120V)
Neutral
12V Power Supply Module or 5V To 12V Converter Module
Ground
ON/OFF Slide Switch
Hot Wire 1 from Remote Control Receiver or Hot Wire from WiFi Power Module

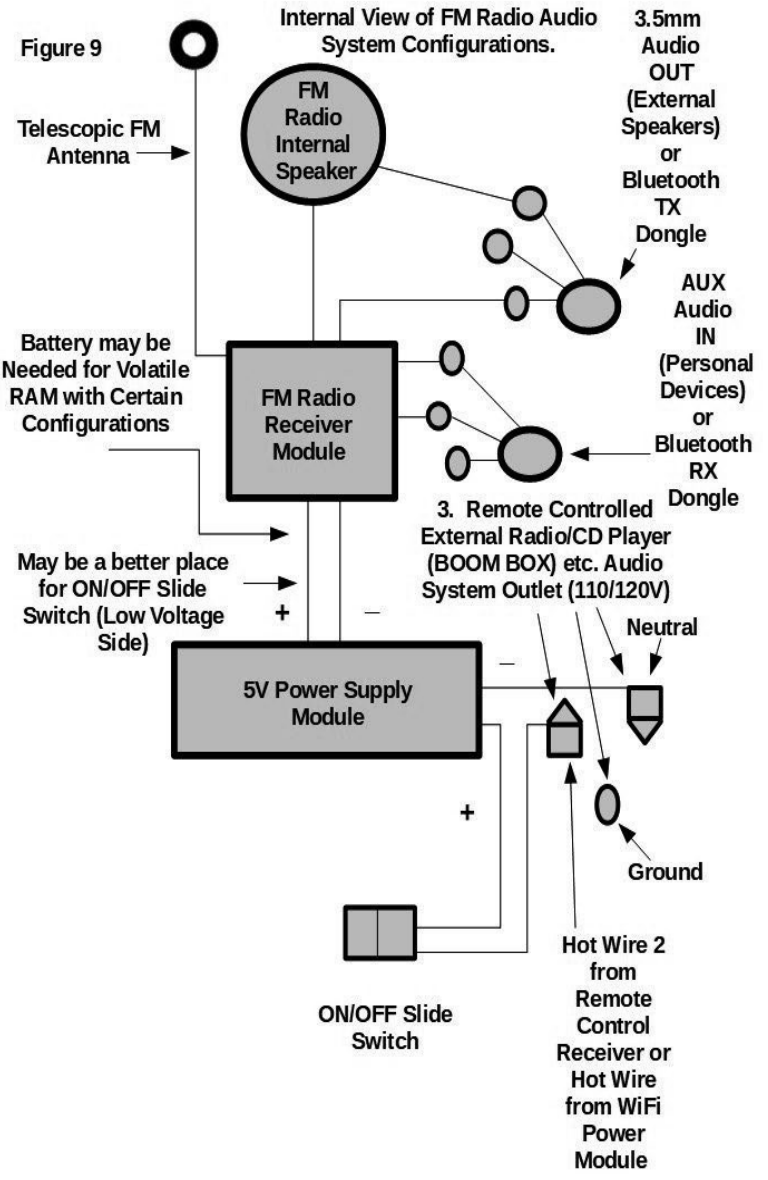
Figure 9
Internal View of FM Radio Audio System Configurations.
3.5mm Audio OUT (External Speakers) or Bluetooth TX Dongle
Telescopic FM Antenna
FM Radio Internal Speaker
AUX Audio IN (Personal Devices) or Bluetooth RX Dongle
Battery may be Needed for Volatile RAM with Certain Configurations
FM Radio Receiver Module
3. Remote Controlled External Radio/CD Player (BOOM BOX) etc. Audio System Outlet (110/120V)
May be a better place for ON/OFF Slide Switch (Low Voltage Side)
+
–
Neutral
5V Power Supply Module
–
+
Ground
ON/OFF Slide Switch
Hot Wire 2 from Remote Control Receiver or Hot Wire from WiFi Power Module

Figure 10

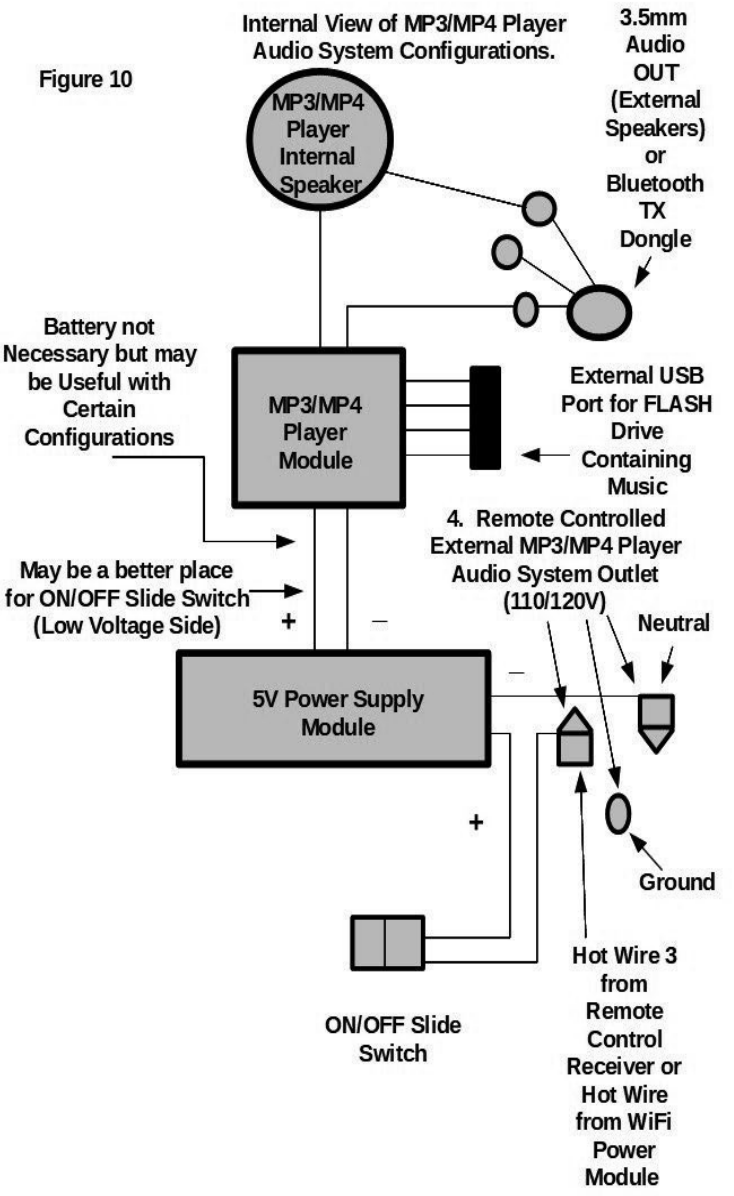
Internal View of MP3/MP4 Player Audio System Configurations.
3.5mm Audio OUT (External Speakers) or Bluetooth TX Dongle
MP3/MP4 Player Internal Speaker
Battery not Necessary but may be Useful with Certain Configurations
MP3/MP4 Player Module
External USB Port for FLASH Drive Containing Music
4. Remote Controlled External MP3/MP4 Player Audio System Outlet (110/120V)
May be a better place for ON/OFF Slide Switch (Low Voltage Side)
+
–
Neutral
5V Power Supply Module
–
+
Ground
Hot Wire 3 from Remote Control Receiver or Hot Wire from WiFi Power Module
ON/OFF Slide Switch

Figure 11

Internal View of Television Audio System Configurations.

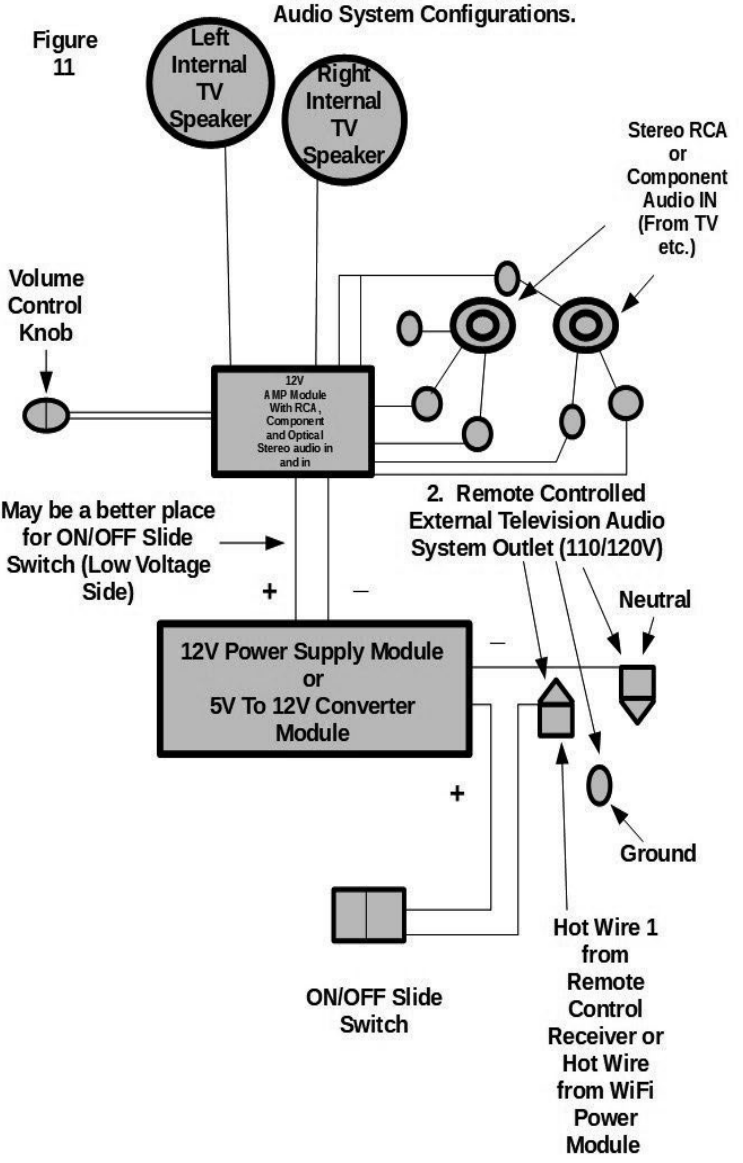

Internal View of Television Audio System Configurations.

Figure 12

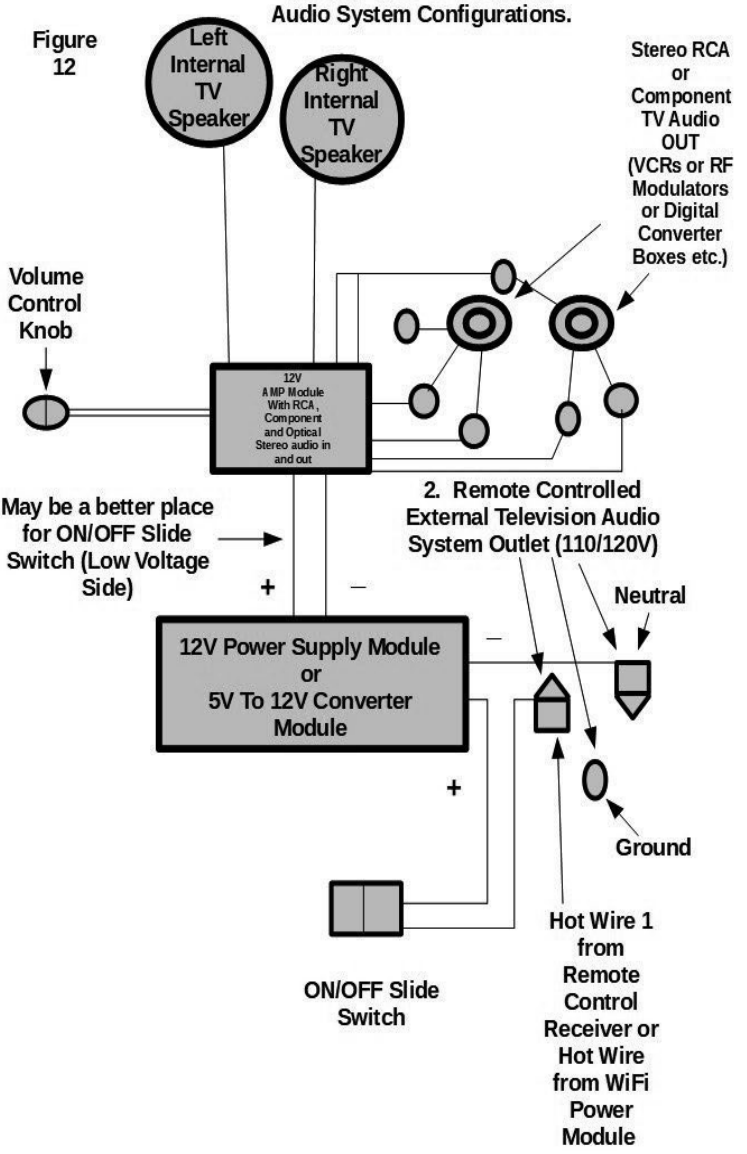

Figure 13

Internal View of Television Audio System Configurations.

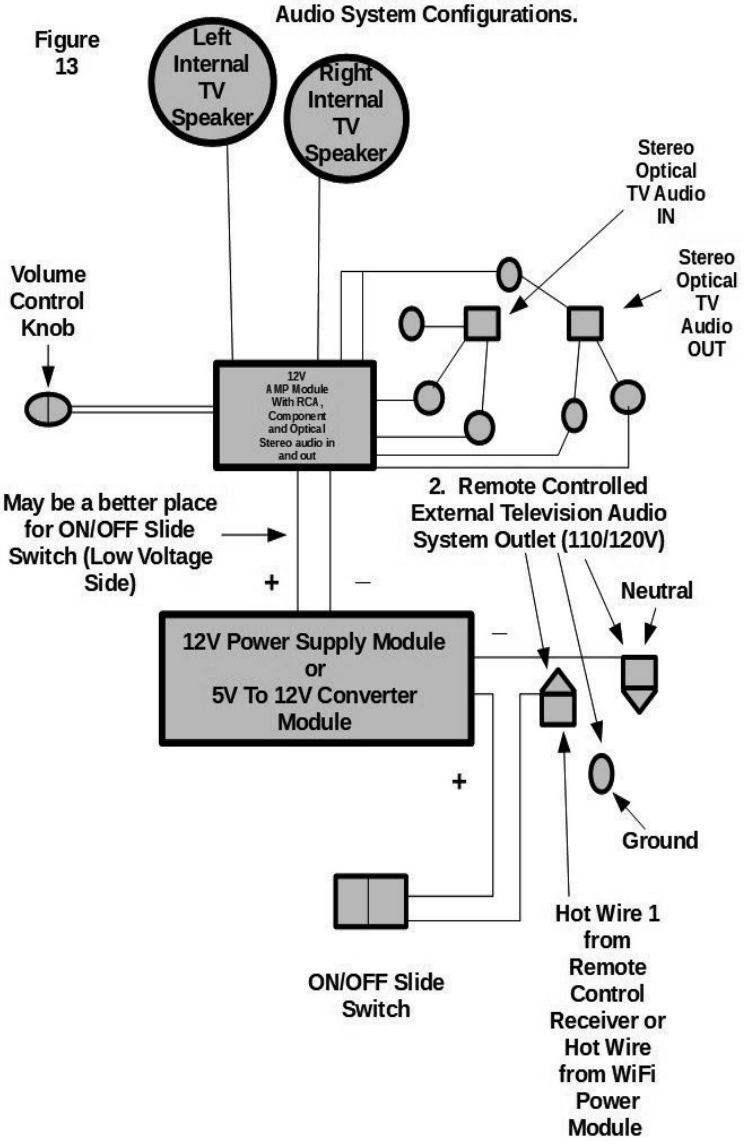

Television Commercial Silencer Electrical Wall Outlet Receptacle Tap Function Numbering Details

1. Television Commercial Silencer Electrical Wall Outlet Receptacle Tap.

2. Remote Controlled External Television Audio System. Outlet

3. Remote Controlled External Radio/CD Player/Radio/BOOM BOX) etc.

Audio System Outlet.

4. Remote Controlled External MP3/MP4 Player Audio System Outlet.

5. Always on (HOT) Standard 110/120 Volt Outlet.

6. Always on (HOT) Standard 110/120 Volt Outlet.

7. Always on (HOT) Standard 110/120 Volt Outlet.

8. External Telescopic FM Radio Antenna for Internal FM. Radio

9. External Volume Control Knob for Internal Television Audio Stereo Speakers.

10. External Remote Control Receiver Antenna.

11. External Replaceable Battery(s)' Compartment.

12. Internal Left Speaker for Television Stereo Audio.

13. Internal Right Speaker for Television Stereo Audio.

14. Internal Speaker for Internal FM Radio.

15. Internal Speaker for Internal MP3/MP4 Player.

16. 3.5 mm Television Audio In Port.

17. 3.5 mm Television Audio Out Port For (External Speakers).

18. 3.5 mm Internal FM Radio AUX In Port.

19. 3.5 mm Internal FM Radio Audio Out Port For (External Speakers).

20. 3.5 mm Internal MP3/MP4 layer Audio Out Port For (External Speakers).

21. Internal FM Radio Power On Button.

22. Internal FM Radio Volume Down Button.

23. Internal FM Radio Volume Up Button.

24. Internal FM Radio Seek Down Button 25. Internal FM Radio Seek UP Button.

25. Internal MP3/MP4 Player USB In Port For FLASH Drive Containing Music.

26. External Slide ON/OFF Switch for Internal Television Audio Stereo Speakers.

27. External Slide ON/OFF Switch for Internal Radio.

28. External Slide ON/OFF Switch for Internal MP3/MP4 Player.

29. Standard 110/120 Volt Grounded Plug for Standard Residential Wall Outlet Receptacle.

30. Wireless Remote Control For Outlet's Numbers 2, 3, 4, For (Internal and External Audio System's Remote Control).

31. Remote Control Button (1) To Power ON/OFF External Television Audio System (Or Internal Television Stereo Speakers).

32. Remote Control Button (2) To Power ON/OFF External Radio/CD Player (BOOM BOX) etc. Audio Systems (Or Internal Radio).

33. Remote Control Button (3) To Power ON/OFF External MP3/MP4 Player etc. Audio Systems (Or Internal MP3/MP4 Player).

34. ALL Outlets ON Button.

35. ALL Outlets OFF Button.

36. SLEEP Button. ALL Outlets OFF After 15 Min..

37. Optical Audio in port.

38. Optical Audio out port.

39. RCA and Component Audio in Ports.

40. RCA and Component Audio out Ports.

US010249996B2

(12) **United States Patent**
Hassey

(10) **Patent No.: US 10,249,996 B2**
(45) **Date of Patent: Apr. 2, 2019**

(54) **TELEVISION COMMERCIAL SILENCER ELECTRICAL WALL OUTLET RECEPTACLE TAP**

(71) Applicant: **Richard Jon Hassey**, Punta Gorda, FL (US)

(72) Inventor: **Richard Jon Hassey**, Punta Gorda, FL (US)

(*) Notice: Subject to any disclaimer, the term of this patent is extended or adjusted under 35 U.S.C. 154(b) by 0 days.

(21) Appl. No.: **15/732,655**

(22) Filed: **Dec. 8, 2017**

(65) **Prior Publication Data**

US 2018/0191111 A1 Jul. 5, 2018

Related U.S. Application Data

(60) Provisional application No. 62/498,708, filed on Jan. 4, 2017.

(51) **Int. Cl.**

H04R 27/00	(2006.01)
H01R 25/00	(2006.01)
G10L 17/22	(2013.01)
G10K 11/34	(2006.01)
H01R 27/02	(2006.01)
H01R 13/66	(2006.01)

(52) **U.S. Cl.**

CPC ***H01R 25/006*** (2013.01); ***G10K 11/345*** (2013.01); ***G10L 17/22*** (2013.01); ***H01R 25/003*** (2013.01); ***H01R 27/02*** (2013.01); *H01R 13/6659* (2013.01); *H01R 2201/18* (2013.01)

(58) **Field of Classification Search**

CPC H04R 27/00

See application file for complete search history.

(56) **References Cited**

U.S. PATENT DOCUMENTS

3,928,737	A *	12/1975	Prasert	H01R 13/703 200/51 LM
4,267,460	A *	5/1981	Habighorst	H01H 19/58 200/1 R
4,413,211	A *	11/1983	Fowler	H02P 23/24 318/257
4,620,071	A *	10/1986	Rushansky	H01H 23/168 200/339

(Continued)

Primary Examiner Olisa Anwah

(74) *Attorney, Agent, or Firm* — Edward M. Livingston, Esq.; Bryan L. Loeffler, Esq.; Livingston Loeffler, P.A.

(57) **ABSTRACT**

I rewired a standard one gang electrical outlet receptacle with an 110/120 volt three position toggle switch (ON, OFF, ON). The rewiring allowed for the top outlet to be hot when the toggle was up (ON) and the bottom outlet would be OFF. Conversely, the bottom outlet would be hot when the toggle was down (ON) and the top outlet would be OFF. When the toggle switch was flipped to the middle position (OFF), both outlets would be off. Plugged a 3.5 mm plug from a set of amplified external speakers into my headphone port on the side of my television. The external speakers were plugged into the top outlet on my rewired receptacle. The bottom outlet on my rewired receptacle provided power to my "BOOM BOX." Flipping my three position toggle switch up turned on my television audio while flipping the toggle switch down would "Silence" my television audio and turn on my "BOOM BOX" radio.—My rewired receptacle is the origin of the Television Commercial Silencer Electrical Wall Outlet Receptacle Tap.

8 Claims, 13 Drawing Sheets

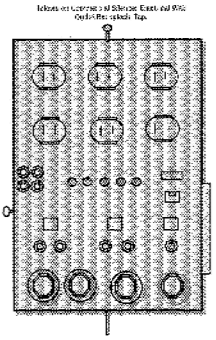

(56) **References Cited**

U.S. PATENT DOCUMENTS

4,978,318	A *	12/1990	Wiley	H01R 25/006 174/54
5,708,477	A *	1/1998	Forbes	G11B 15/087 348/552
6,538,202	B1 *	3/2003	Shaffer	H02G 3/00 174/66
6,984,057	B1 *	1/2006	Rogers	A47B 81/06 362/125
9,369,767	B2 *	6/2016	Hjelmstedt	H04N 21/6175
2002/0195324	A1 *	12/2002	Lee	C08J 9/0004 200/51.03
2004/0019905	A1 *	1/2004	Fellenstein	H04N 7/163 725/32
2007/0266400	A1 *	11/2007	Rogers	H04N 7/162 725/42
2008/0041708	A1 *	2/2008	James	H01H 23/20 200/5 R
2009/0146494	A1 *	6/2009	Mori	G06F 1/266 307/38
2011/0141647	A1 *	6/2011	Garcia	H01H 23/145 361/166
2013/0152126	A1 *	6/2013	Shkedi	H04N 21/812 725/34
2014/0334640	A1 *	11/2014	Chan	G06F 1/266 381/98
2017/0325005	A1 *	11/2017	Liassides	H04N 21/25841

* cited by examiner

Figure 1-13

Television Commercial Silencer Electrical Wall Outlet Receptacle Tap.

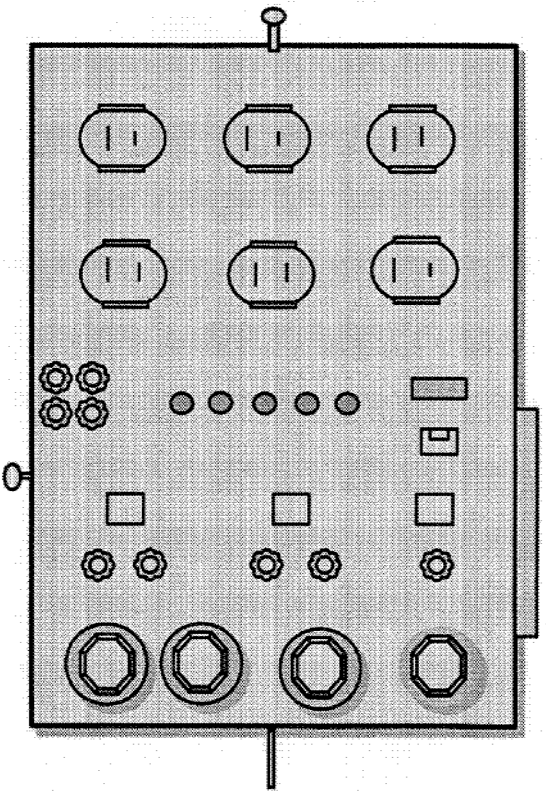

Figure 2-13
Side View of Television Commercial Silencer
Electrical Wall Outlet Receptacle Tap.

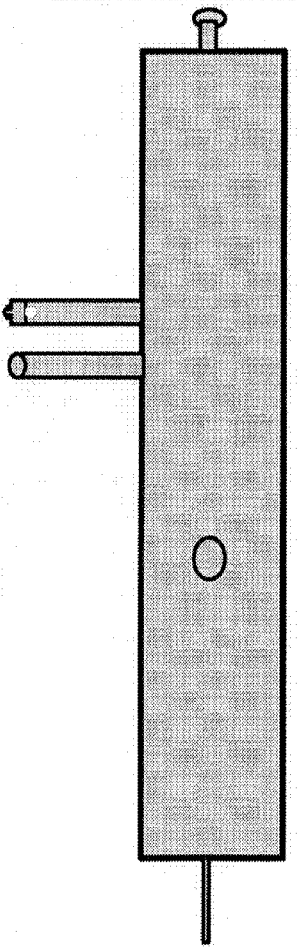

Figure 3-13

Remote Control for Television Commercial Silencer Wall Outlet Receptacle tap.

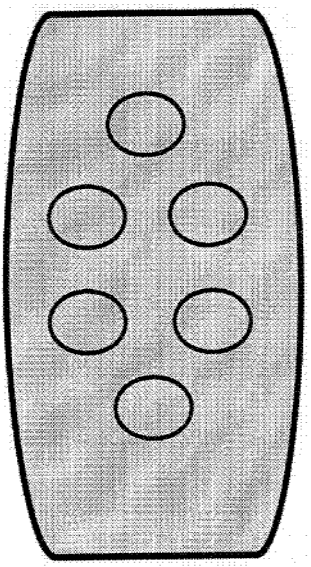

Figure 4-13
Television Commercial Silencer Electrical Wall Outlet Receptacle Tap Function Numbering.

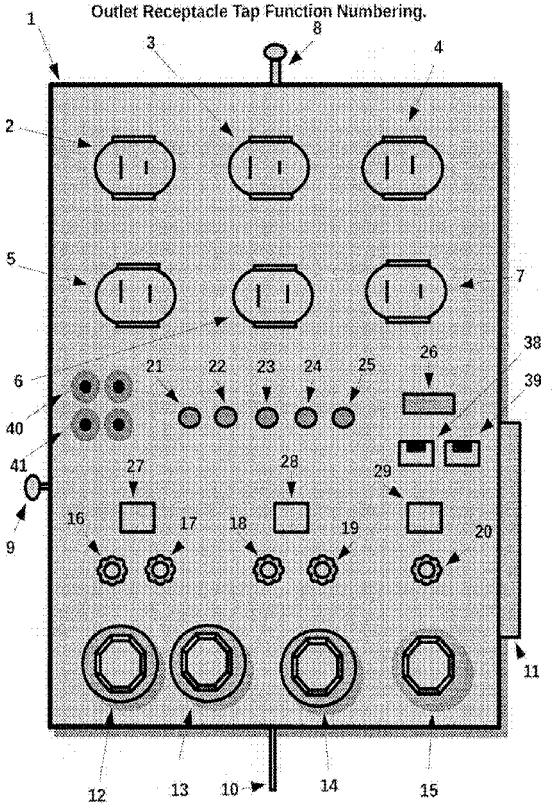

Figure 5-13
Side View of Television Commercial Silencer Electrical Wall Outlet Receptacle Tap Function Numbering.

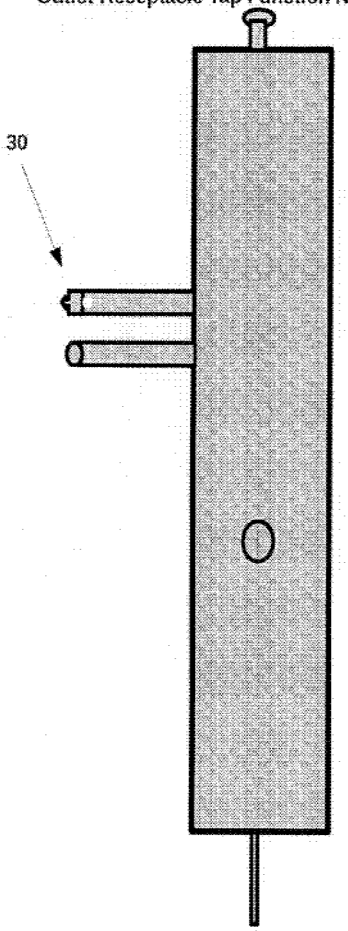

Figure 6-13

Remote Control Button Assignments for Television Commercial Silencer Electrical Wall Outlet Receptacle Tap Function Numbering.

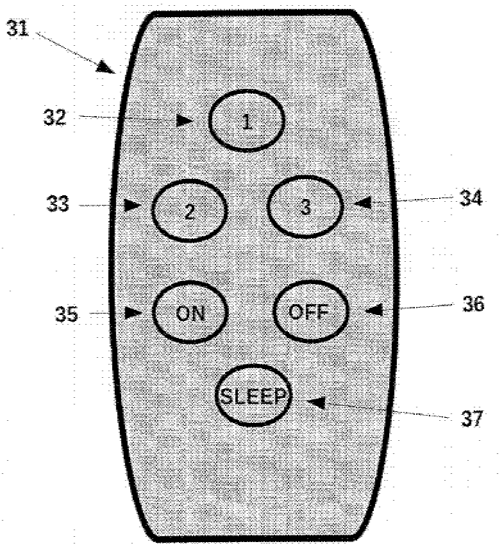

Figure 7-13

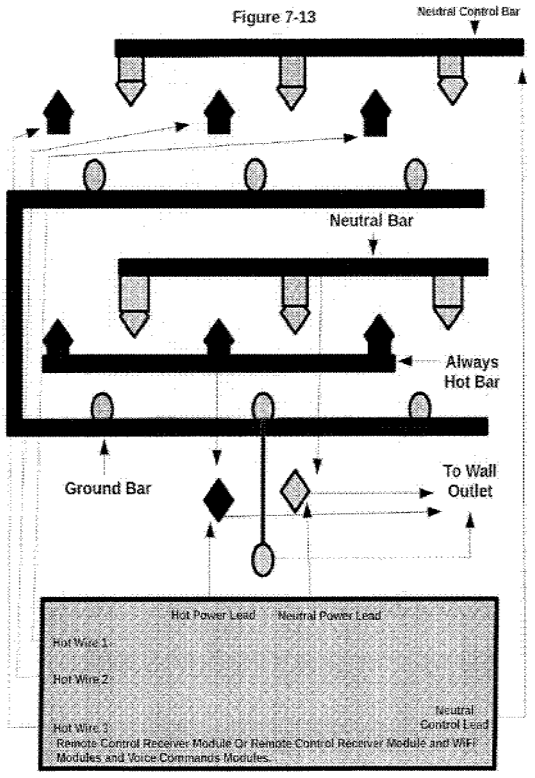

Internal View of Outlet Configurations
Top 3 Outlets Remote Controlled; Bottom 3 Outlets Always Hot.

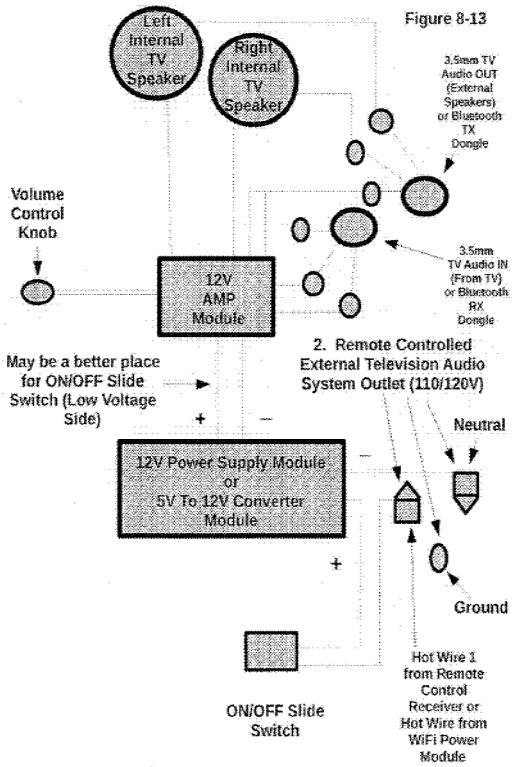

Internal View of Television 3.5mm IN/OUT Audio System Configurations.

Figure 9-13

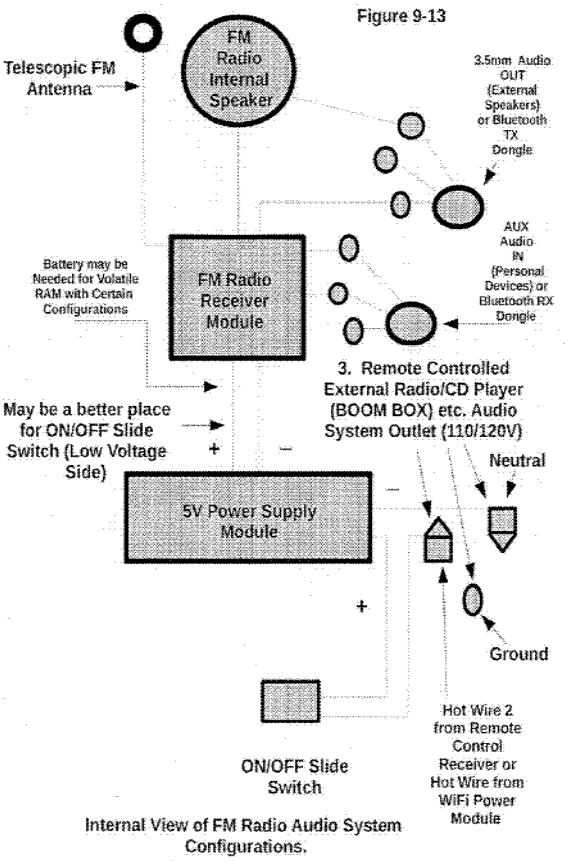

Internal View of FM Radio Audio System Configurations.

Figure 10-13

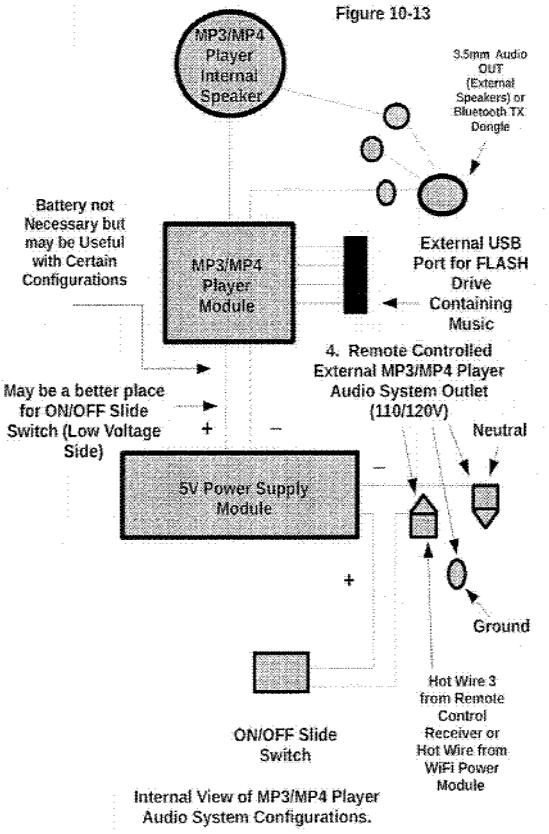

Internal View of MP3/MP4 Player Audio System Configurations.

Figure 11-13

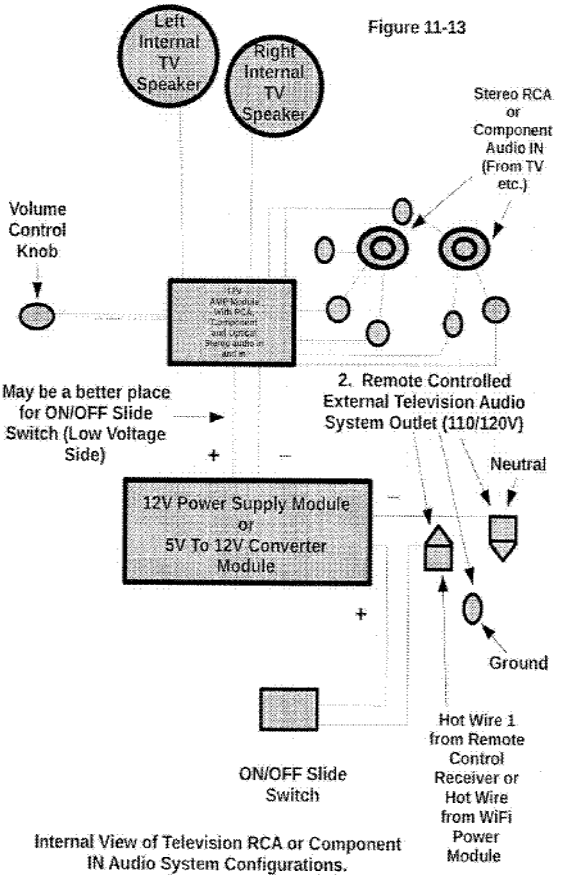

Internal View of Television RCA or Component IN Audio System Configurations.

Figure 12-13

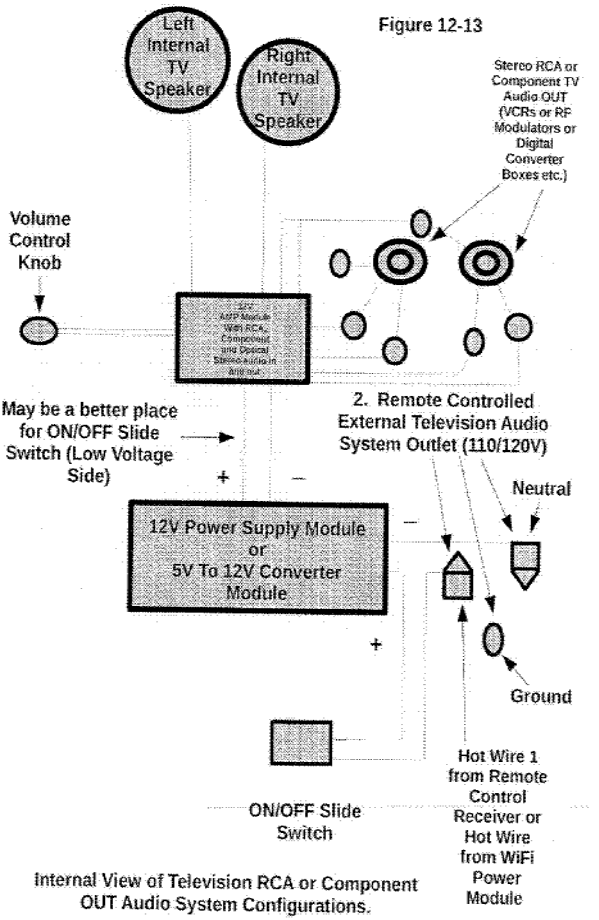

Internal View of Television RCA or Component OUT Audio System Configurations.

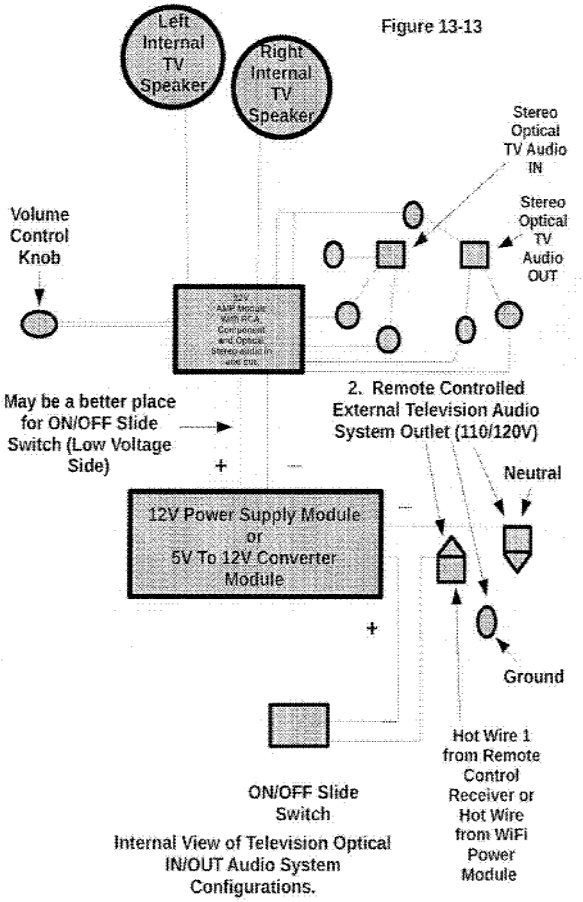

Figure 13-13

Internal View of Television Optical IN/OUT Audio System Configurations.

Television Commercial Silencer Electrical Wall Outlet Receptacle Tap

Document ID

US 10249996 B2

Date Published

2019-04-02

Inventor Information

Hassey; Richard Jon

Punta Gorda

FL

US

Application NO

15/732655

Date Filed

2017-12-08

Domestic Priority (Continuity Data)

us-provisional-application US 62498708 20170104

US Class Current:

1/1

CPC Current

Type

CPC

Date

CPCI

H 01 R 25/003

2013-01-01

CPCI

H 01 R 27/02

2013-01-01

CPCI

G 10 K 11/345

2013-01-01

CPCI

H 01 R 25/006

2013-01-01

CPCI

G 10 L 17/22

2013-01-01

CPCA

H 01 R 13/6658

2013-01-01

CPCA

H 01 R 2201/18

2013-01-01

Abstract

I rewired a standard one gang electrical outlet receptacle with an 110/120 volt three position toggle switch (ON, OFF, ON). The rewiring allowed for the top outlet to be hot when the toggle was up (ON) and the bottom outlet would be OFF. Conversely, the bottom outlet would be hot when the toggle was down (ON) and the top outlet would be OFF. When the toggle switch was flipped to the middle position (OFF), both outlets would be off. Plugged a 3.5 mm plug from a set of amplified external speakers into my headphone port on the side of my television. The external speakers were plugged into the top outlet on my rewired receptacle. The bottom outlet on my rewired receptacle provided power to my “BOOM BOX.” Flipping my three position toggle switch up turned on my television audio while flipping the toggle switch down would “Silence” my television audio and turn on my “BOOM BOX” radio.—My rewired receptacle is the origin of the Television Commercial Silencer Electrical Wall Outlet Receptacle Tap.

Background/Summary

BRIEF SUMMARY OF THE INVENTION

(1) Television Commercial Silencer Electrical Wall Outlet Receptacle Tap is a small user friendly device that gives one the convenient ability NOT to “mute” but to “silence” television commercials while at the same time enabling an audio system of their own choosing.

BACKGROUND OF THE INVENTION

(2) In an attempt to eliminate the bombardment of irrelevant commercials that one is exposed to on a daily bases, while staying WITHIN a budget, I rewired a standard one gang electrical outlet receptacle with an 110/120 volt three position toggle switch (ON, OFF, ON). The rewiring allowed for the top outlet to be hot when the toggle was up (ON) and the bottom outlet would be OFF. Conversely, the bottom outlet would be hot when the toggle was down (ON) and the top outlet would be OFF. When the toggle switch was flipped to the middle position (OFF), both outlets would be off.

(3) With this newly rewired receptacle, I was able to insert the 3.5 mm plug from a set of amplified external speakers into my headphone port on the side of my television. The external speakers were provided power by plugging their AC adapter into the top outlet on my rewired receptacle. The bottom outlet on my rewired receptacle provided power to my “BOOM BOX.” Flipping my three position toggle switch up turned on my television audio while flipping the toggle switch down would “Silence” my television audio and turn on my “BOOM BOX” radio.—My rewired receptacle is the origin of the Television Commercial Silencer Electrical Wall Outlet Receptacle Tap.

(4) As time went on and the “benefits” of silencing burdensome television commercials became apparent to me, it was noticed that tethering to a toggle switch was inconvenient. Therefore, I took my same rewired outlet receptacle and I added some more electronics to the work box (Wireless Receiver Module). Adding the wireless receiver module with a hand held remote control allowed for silencing television commercials from anywhere in my home and turning on the radio at the same time.

(5) After noticing that at times there were just as many commercials on the radio as on the television, I plugged my MP3 player into the bottom outlet of my rewired receptacle instead of my radio. My MP3 player was so small that I thought that it might just fit inside my rewired receptacle work box—it did!

(6) The possibilities began to unfold and I was determined to “shove” a radio inside my rewired receptacle work box as well. However, a single gang outlet receptacle work box can ONLY hold so much “stuff.”—Went to a two gang and then a three gang outlet receptacle work box, increasing size as space was needed for the components. Added receptacles and wiring and electronics as space permitted.

(7) My one gang, two gang and three gang “Television Commercial Silencers” all work great! Some of them provide more features and functions then others (My 3 gang work box even has WiFi modules so that the unit's remote controlled outlets can be controlled from a Smart

Phone) (Implying, there will be: “An APP for that”—Inclusion of the Voice Commands API during APP development will allow for Voice Control of the Television Commercial Silencer Electrical Wall Outlet Receptacle Tap [Online and Offline Modes are desirable] and technology such as “Bluetooth Smart” during APP development will allow for Auto Detection and Configuration of audio devices near by the Television Commercial Silencer Electrical Wall Outlet Receptacle Tap) but they all do what they were designed to do: Silence television commercials while at the same time turning on NOT just a radio but an audio device of one's own choosing, including a computer's audio system. However, the work boxes started to become bulky and complex; hence, the birth of the user friendly Television Commercial Silencer Electrical Wall Outlet Receptacle Tap.

Description

BRIEF DESCRIPTION OF THE DRAWINGS

(1) Having described the origin, birth and nature of the Television Commercial Silencer Electrical Wall Outlet Receptacle Tap in general terms, reference will now move to the included drawings.

(2) These drawings are NOT to scale and consist of thirteen figures, each on their own page. The figures go from general to specific and provide enough details for any person in the electrical or electronics industry to manufacturer the device.

(3) Indeed, the Television Commercial Silencer Electrical Wall Outlet Receptacle Tap may be embodied in many different forms and should NOT be construed as limited to the embodiment's set forth herein; rather, these embodiment's are provided so that this disclosure will satisfy applicable legal requirements, wherein:

(4) FIG. 1-13 illustrates the general appearance of what a mass produced unit may look like. The unit would be similar in size to a

commonly used multiple outlet or surge protector residential power tap.

(5) FIG. 2-13 illustrates a general side view of such a device. Again, NOT to scale. The width of a mass produced unit would be as small as possible.

(6) FIG. 3-13 illustrates the hand held remote control for the manufactured device and except for scale would look almost like the figure (Inclusion of WiFi modules WITHIN the unit will permit remote control of the unit's audio outlets via a smart phone).

(7) FIG. 4-13 illustrates a breakdown of features and functions by the number. The specific details of each numbered component are provided on a separate page later in this Utility Patent Application (NON Provisional).

(8) FIG. 5-13 illustrates again a general side view of such a device with emphasis that the manufactured device will be compact and convenient and able to plug into a standard 110/120 volt wall outlet receptacle.—Portable enough to take along on road trips and to motels.

(9) FIG. 6-13 illustrates a breakdown of the functions that the hand held remote control will provide, by the numbers. (Again, with inclusion of WiFi modules WITHIN the unit, the remote controlled outlets may be managed via a smart phone.—Inclusion of the Voice Commands API and technology such as “Bluetooth Smart” during APP development will allow for Voice Control and Auto Detection and Configuration of audio devices near by the Television Commercial Silencer Electrical Wall Outlet Receptacle Tap).

(10) FIG. 7-13 illustrates a detailed internal view of the outlet configurations for the Television Commercial Silencer Electrical Wall Outlet Receptacle Tap, showing the wiring diagrams for the three

remote controlled outlets and the three always hot or WiFi enabled outlets or Voice enabled outlets (implying, there will be: “An APP for that”—Inclusion of the Voice Commands API during APP development will allow for Voice Control of the Television Commercial Silencer Electrical Wall Outlet Receptacle Tap) as well as how the remote controlled outlets and power supply connect to the remote control, WiFi control or Voice control receiver module(s) inside the Television Commercial Silencer Electrical Wall Outlet Receptacle Tap.

(11) FIG. 8-13 illustrates the internal view of the components and wiring necessary for the Television Commercial Silencer Electrical Wall Outlet Receptacle Tap to produce its own stereo television sound via 3.5 mm ports directly from the unit with the option of utilizing one's own external speakers or audio system of choice.

(12) FIG. 9-13 illustrates the internal view of the components and wiring necessary for the Television Commercial Silencer Electrical Wall Outlet Receptacle Tap to produce its own FM radio sound directly from the unit with the option of utilizing one's own external speakers or audio system of choice, including a personal computer's (PC) audio system.

(13) FIG. 10-13 illustrates the internal view of the components and wiring necessary for the Television Commercial Silencer Electrical Wall Outlet Receptacle Tap to produce its own MP3/MP4 sound directly from the unit with the option of utilizing one's own external speakers or audio system of choice.

(14) FIG. 11-13 illustrates the internal view of the components and wiring necessary for the Television Commercial Silencer Electrical Wall Outlet Receptacle Tap to produce its own stereo television sound via RCA and Component Audio IN Ports directly from the unit with the option of utilizing one's own external speakers or audio system of choice.

(15) FIG. 12-13 illustrates the internal view of the components and wiring necessary for the Television Commercial Silencer Electrical Wall Outlet Receptacle Tap to produce and pass through its own stereo television sound via RCA and Component Audio OUT Ports directly from the unit with the option of utilizing one's own external speakers or audio system of choice.

(16) FIG. 13-13 illustrates the internal view of the components and wiring necessary for the Television Commercial Silencer Electrical Wall Outlet Receptacle Tap to produce and pass through its own stereo television sound via Optical Audio IN/Out Ports directly from the unit with the option of utilizing one's own external speakers or audio system of choice. Finally, the two pages following FIG. 13-13 are the Figure Number Descriptions.

DETAILED DESCRIPTION OF THE INVENTION

(17) The terminology used herein is for the purpose of describing particular embodiment's ONLY and is NOT intended to be limiting of the Television Commercial Silencer Electrical Wall Outlet Receptacle Tap (Invention).

(18) The exterior of such a plug-in unit should comprise of at least three low voltage remote controlled power outlets specifically designed for external speakers or audio systems. These low voltage outlets should NOT be considered standard power outlets and shall be labeled as such. On the other hand, such a plug-in unit should also comprise of at least three standard 110/120 volt and/or WiFi enabled power outlets and shall be labeled as such.

(19) The FM radio controls on the exterior of such a unit may vary slightly based on radio module cost, selection and availability during manufacturing but the module selection will NOT limit the units functionality and purpose. The same applies to the MP3/MP4 module, [Component and Composite Audio Modules], [Optical Audio Modules], [WiFi modules], [Bluetooth Modules], [Voice Control Modules] and

various electrical and electronic components, as well as the poly case selection, cut-outs and label printing.

(20) The goal is to place the invention into a compact easy to use practical package for mass production for even a novice to appreciate as well as provide the most extensible set of features and options to put the end user in complete control. I believe that this package provides said.

(21) The unit is completely self contained and can operate on its own by simply plugging the unit into a standard wall outlet and making one connection or Wireless via Bluetooth. Either plug in a 3.5 mm headphone cable from one's television to the 3.5 mm audio in port on the unit or utilize one of the multiple available audio ports on the exterior of the unit or plug one's television audio system's power cable into: 2. Remote Controlled External Television Audio System Outlet on the unit (See Television Commercial Silencer Electrical Wall Outlet Receptacle Tap Function Numbering Details).—On Bluetooth enabled Televisions or via on-board Bluetooth or external dongle, no wired connection is required. (Bluetooth speakers sold separately)

(22) One will then have the option of silencing television commercials and listening to their favorite radio station instead, WITHOUT any further configuration (other then tuning the internal radio to their favorite station and perhaps extending the external FM radio antenna for adequate reception).

(23) It's when the end user desires more that the configuration possibilities for the Television Commercial Silencer Electrical Wall Outlet Receptacle Tap become quite extensive. As a matter of fact, It would NOT be possible to cover all of the different audio device configuration possibilities in this application. This compact unit should allow for the configuration of virtually any end user's desired audio setup.

(24) (May also use Bluetooth dongle for additional options and functions: e.g., a 3.5 mm Bluetooth dongle receiver inserted into the AUX port of the Television Commercial Silencer Electrical Wall Outlet Receptacle Tap will provide features such as: connecting one's smart phone wireless to the Television Commercial Silencer Electrical Wall Outlet Receptacle Tap allowing for playback of one's mp3 collection residing on one's phone, audio books or even online content from YouTube™).

(25) Furthermore, don't forget that one's smart phone can also serve as the hand held remote control for the Television Commercial Silencer Electrical Wall Outlet Receptacle Tap. Many more configuration options will be included in the Stage 5 Manual. Please stay “tuned!”

(26) P.S. To the manufacturer's, an RF modulator specially designed for the Television Commercial Silencer Electrical Wall Outlet Receptacle Tap will also provide NOT just e.g., YouTube™ audio but also video via the Television Commercial Silencer Electrical Wall Outlet Receptacle Tap. Thus, YouTube™ audio and video e.g. could be presented to the End User during Television Commercial breaks. [In conclusion, utilizing a “Computer in a Box” such as a “Cubieboard™” possibilities are extensive and the future of the Television Commercial Silencer Electrical Wall Outlet Receptacle Tap is bright!

(27) Also, remember that if one's Television does NOT have built-in Bluetooth capabilities but has a headphone jack, one can plug a Bluetooth transmitter dongle into one's Television headphone jack or various other audio ports on the exterior of one's Television based on manufacturer. In addition, even the oldest analog televisions that are still using analog to digital converter boxes can still benefit from the Television Commercial Silencer Electrical Wall Outlet Receptacle Tap via RCA cables and/or an RF modulator if need be. There will be a solution for virtually every audio setup.

(28) The unit is designed from the simple to the complex. One can plug the unit in and listen to their television through the units' two internal stereo speakers or plug in their own external speakers. If the end user chooses to use amplified speakers, they would simply plug the 3.5 mm plug from their external speakers into the television audio OUT port on the front of the unit and the external amplified speaker's power cord into: addition, if the end user prefers to listen to their television through their television external audio system or home entertainment system, simply plug the respective power cord into: 2. Remote Controlled External Television Audio System Outlet.

(29) The foregoing also applies to: 3. Remote Controlled External Radio/CD Player (BOOM BOX) etc. Audio System Outlet and 4. Remote Controlled External MP3/MP4 Player etc. Audio System Outlet. The end user can also listen to their favorite MP3/MP4 music “Out of the Box” so to speak by simply plugging in a “FLASH” (USB) drive containing their own music into the front of the unit, if they prefer; or, as with the unit's internal stereo television audio speakers and internal radio, the end user can slide a switch on the front of the unit to turn off respectively each of the unit's internal audio devices entirely and plug in their own, in the respective: Remote Controlled External Audio System Outlet.

Claims

1. A television commercial silencer comprising: an electrical outlet receptacle having a first outlet and a second outlet; a switch connected to the first outlet and second outlet; said switch having a first position, a second position and a third position; wherein when said switch is in the first position, the first outlet is on and the second outlet is off; wherein when said switch is in the second position, the first outlet is off and the second outlet is off; wherein when said switch is in the third position, the first outlet is off and the second outlet is on; said first outlet being connected to at least one speaker connected to a television; said second outlet being connected to an audio device; and said audio device is connected to the television commercial silencer via an audio cable.

2. The television commercial silencer of claim 1 further comprising: a switch for turning said audio cable on and off.

3. A television commercial silencer comprising: an electrical outlet receptacle having a first outlet and a second outlet; a switch connected to the first outlet and second outlet; said switch having a first position, a second position and a third position; wherein when said switch is in the first position, the first outlet is on and the second outlet is off; wherein when said switch is in the second position, the first outlet is off and the second outlet is off; wherein when said switch is in the third position, the first outlet is off and the second outlet is on; said first outlet being connected to at least one speaker connected to a television; said second outlet being connected to an audio device; and said audio device is connected to the television commercial silencer via a wireless connection.

4. The television commercial silencer of claim 3 further comprising: a switch for turning said wireless connection on and off.

5. A television commercial silencer comprising: an electrical outlet receptacle having a first outlet and a second outlet; a switch connected to the first outlet and second outlet; said switch having a first position, a second position and a third position; wherein when said switch is in the first position, the first outlet is on and the second outlet is off; wherein when said switch is in the second position, the first outlet is off and the second outlet is off; wherein when said switch is in the third position, the first outlet is off and the second outlet is on; said first outlet being connected to at least one speaker connected to a television; said second outlet being connected to an audio device; and said at least one speaker connected to said television is connected to the television commercial silencer via an audio cable.

6. The television commercial silencer of claim 5 further comprising: a switch for turning said audio cable on and off.

7. A television commercial silencer comprising: an electrical outlet receptacle having a first outlet and a second outlet; a switch connected to the first outlet and second outlet; said switch having a first position, a second position and a third position; wherein when said switch is in the first position, the first outlet is on and the second outlet is off; wherein when said switch is in the second position, the first outlet is off and the second outlet is off; wherein when said switch is in the third position, the first outlet is off and the second outlet is on; said first outlet being connected to at least one speaker connected to a television; said second outlet being connected to an audio device; and said at least one speaker connected to said television is connected to the television commercial silencer via a wireless connection.

8. The television commercial silencer of claim 7 further comprising: a switch for turning said wireless connection on and off.

UNITED STATES PATENT AND TRADEMARK OFFICE

UNITED STATES DEPARTMENT OF COMMERCE
United States Patent and Trademark Office
Address: COMMISSIONER FOR PATENTS
P.O. Box 1450
Alexandria, Virginia 22313-1450
www.uspto.gov

APPLICATION NUMBER	FILING OR 371(C) DATE	FIRST NAMED APPLICANT	ATTY. DOCKET NO./TITLE
15/732,655	12/08/2017	Richard Jon Hassey	18-9521

CONFIRMATION NO. 8356

30565
WOODARD, EMHARDT, HENRY, REEVES & WAGNER, LLP
111 MONUMENT CIRCLE, SUITE 3700
INDIANAPOLIS, IN 46204-5137

POA ACCEPTANCE LETTER

OC000000058782080

Date Mailed: 06/29/2023

NOTICE OF ACCEPTANCE OF POWER OF ATTORNEY

This is in response to the Power of Attorney filed 06/26/2023.

The Power of Attorney in this application is accepted. Correspondence in this application will be mailed to the above address as provided by 37 CFR 1.33.

Questions about the contents of this notice and the requirements it sets forth should be directed to the Office of Data Management, Application Assistance Unit, at **(571) 272-4000** or **(571) 272-4200** or **1-888-786-0101**.

/tawashington/

UNITED STATES PATENT AND TRADEMARK OFFICE

UNITED STATES DEPARTMENT OF COMMERCE
United States Patent and Trademark Office
Address: COMMISSIONER FOR PATENTS
P.O. Box 1450
Alexandria, Virginia 22313-1450
www.uspto.gov

APPLICATION NUMBER	FILING OR 371(C) DATE	FIRST NAMED APPLICANT	ATTY. DOCKET NO./TITLE
15/732,655	12/08/2017	Richard Jon Hassey	18-9521

CONFIRMATION NO. 8356

39820
LIVINGSTON LAW, P.A.
P.O. Box 110340
Naples, FL 34108

POWER OF ATTORNEY NOTICE

OC000000058782049

Date Mailed: 06/29/2023

NOTICE REGARDING CHANGE OF POWER OF ATTORNEY

This is in response to the Power of Attorney filed 06/26/2023.

- The Power of Attorney to you in this application has been revoked by the applicant. Future correspondence will be mailed to the new address of record(37 CFR 1.33).

Questions about the contents of this notice and the requirements it sets forth should be directed to the Office of Data Management, Application Assistance Unit, at **(571) 272-4000** or **(571) 272-4200** or **1-888-786-0101**.

/tawashington/

PTO/AIA/81A (02-15)
Approved for use through 03/31/2021. OMB 0651-0035
U.S. Patent and Trademark Office; U.S. DEPARTMENT OF COMMERCE
Under the Paperwork Reduction Act of 1995 no persons are required to respond to a collection of information unless it displays a valid OMB control number

PATENT - POWER OF ATTORNEY OR REVOCATION OF POWER OF ATTORNEY WITH A NEW POWER OF ATTORNEY AND CHANGE OF CORRESPONDENCE ADDRESS

Patent Number	10249996
Issue Date	04/02/2019
First Named Inventor	Richard Jon Hassey
Title	Television commercial silencer electrical wall outlet receptacle tap
Attorney Docket No.	

I hereby revoke all previous powers of attorney given in the above-identified patent.

☐ A Power of Attorney is submitted herewith.

OR

☒ I hereby appoint Practitioner(s) associated with the Customer Number identified in the box at right as my/our attorney(s) or agent(s) with respect to the patent identified above, and to transact all business in the United States Patent and Trademark Office connected therewith: 30565

OR

☐ I hereby appoint Practitioner(s) named below as my/our attorney(s) or agent(s) with respect to the patent identified above, and to transact all business in the United States Patent and Trademark Office connected therewith:

Practitioner(s) Name	Registration Number

Please recognize or change the correspondence address for the above-identified patent to:

☒ The address associated with the above-identified Customer Number.

OR

☐ The address associated with the Customer Number identified in the box at right:

OR

☐ Firm or Individual Name					
Address					
City		State		Zip	
Country					
Telephone		Email			

I am the:

☒ Applicant.

OR

☐ Patent owner.

Statement under 37 CFR 3.73(c) (Form PTO/AIA/96) submitted herewith or filed on _____.

SIGNATURE of Applicant or Patent Owner

Signature	Richard Jon Hassey	Date	05/02/2023
Name	Richard Jon Hassey	Telephone	+1 (916) 994-0605
Title and Company			

NOTE: Signatures of all the applicants or patent owners of the entire interest or their representative(s) are required. If more than one signature is required, submit multiple forms, check the box below, and identify the total number of forms submitted in the blank below.

☐ A total of _____ forms are submitted.

This collection of information is required by 37 CFR 1.31, 1.32, and 1.33. The information is required to obtain or retain a benefit by the public, which is to update (and by the USPTO to process) the file of a patent or reexamination proceeding. Confidentiality is governed by 35 U.S.C. 122 and 37 CFR 1.14. This collection is estimated to take 3 minutes to complete, including gathering, preparing, and submitting the completed application form to the USPTO. Time will vary depending upon the individual case. Any comments on the amount of time you require to complete this form and/or suggestions for reducing this burden, should be sent to the Chief Information Officer, U.S. Patent and Trademark Office, U.S. Department of Commerce, P.O. Box 1450, Alexandria, VA 22313-1450. DO NOT SEND FEES OR COMPLETED FORMS TO THIS ADDRESS. **SEND TO: Commissioner for Patents, P.O. Box 1450, Alexandria, VA 22313-1450.**

If you need assistance in completing the form, call 1-800-PTO-9199 and select option 2.

Privacy Act Statement

The **Privacy Act of 1974 (P.L. 93-579)** requires that you be given certain information in connection with your submission of the attached form related to a patent application or patent. Accordingly, pursuant to the requirements of the Act, please be advised that: (1) the general authority for the collection of this information is 35 U.S.C. 2(b)(2); (2) furnishing of the information solicited is voluntary; and (3) the principal purpose for which the information is used by the U.S. Patent and Trademark Office is to process and/or examine your submission related to a patent application or patent. If you do not furnish the requested information, the U.S. Patent and Trademark Office may not be able to process and/or examine your submission, which may result in termination of proceedings or abandonment of the application or expiration of the patent.

The information provided by you in this form will be subject to the following routine uses:

1. The information on this form will be treated confidentially to the extent allowed under the Freedom of Information Act (5 U.S.C. 552) and the Privacy Act (5 U.S.C 552a). Records from this system of records may be disclosed to the Department of Justice to determine whether disclosure of these records is required by the Freedom of Information Act.
2. A record from this system of records may be disclosed, as a routine use, in the course of presenting evidence to a court, magistrate, or administrative tribunal, including disclosures to opposing counsel in the course of settlement negotiations.
3. A record in this system of records may be disclosed, as a routine use, to a Member of Congress submitting a request involving an individual, to whom the record pertains, when the individual has requested assistance from the Member with respect to the subject matter of the record.
4. A record in this system of records may be disclosed, as a routine use, to a contractor of the Agency having need for the information in order to perform a contract. Recipients of information shall be required to comply with the requirements of the Privacy Act of 1974, as amended, pursuant to 5 U.S.C. 552a(m).
5. A record related to an International Application filed under the Patent Cooperation Treaty in this system of records may be disclosed, as a routine use, to the International Bureau of the World Intellectual Property Organization, pursuant to the Patent Cooperation Treaty.
6. A record in this system of records may be disclosed, as a routine use, to another federal agency for purposes of National Security review (35 U.S.C. 181) and for review pursuant to the Atomic Energy Act (42 U.S.C. 218(c)).
7. A record from this system of records may be disclosed, as a routine use, to the Administrator, General Services, or his/her designee, during an inspection of records conducted by GSA as part of that agency's responsibility to recommend improvements in records management practices and programs, under authority of 44 U.S.C. 2904 and 2906. Such disclosure shall be made in accordance with the GSA regulations governing inspection of records for this purpose, and any other relevant (*i.e.*, GSA or Commerce) directive. Such disclosure shall not be used to make determinations about individuals.
8. A record from this system of records may be disclosed, as a routine use, to the public after either publication of the application pursuant to 35 U.S.C. 122(b) or issuance of a patent pursuant to 35 U.S.C. 151. Further, a record may be disclosed, subject to the limitations of 37 CFR 1.14, as a routine use, to the public if the record was filed in an application which became abandoned or in which the proceedings were terminated and which application is referenced by either a published application, an application open to public inspection or an issued patent.
9. A record from this system of records may be disclosed, as a routine use, to a Federal, State, or local law enforcement agency, if the USPTO becomes aware of a violation or potential violation of law or regulation.

Electronic Acknowledgement Receipt

EFS ID:	48203962
Application Number:	15732655
International Application Number:	
Confirmation Number:	8356
Title of Invention:	Television commercial silencer electrical wall outlet receptacle tap
First Named Inventor/Applicant Name:	Richard Jon Hassey
Customer Number:	39820
Filer:	Joshua P. Astin/Gail Mercer
Filer Authorized By:	Joshua P. Astin
Attorney Docket Number:	18-9521
Receipt Date:	26-JUN-2023
Filing Date:	08-DEC-2017
Time Stamp:	11:03:52
Application Type:	Utility under 35 USC 111(a)

Payment information:

Submitted with Payment	no

File Listing:

Document Number	Document Description	File Name	File Size(Bytes)/ Message Digest	Multi Part /.zip	Pages (if appl.)
1	Power of Attorney	94001-1_POA.pdf	88431 55c298fb9f820646022fa5062859f1f-bccc24a6f	no	2

Warnings:

Information:	
Total Files Size (in bytes):	88431

This Acknowledgement Receipt evidences receipt on the noted date by the USPTO of the indicated documents, characterized by the applicant, and including page counts, where applicable. It serves as evidence of receipt similar to a Post Card, as described in MPEP 503.

New Applications Under 35 U.S.C. 111

If a new application is being filed and the application includes the necessary components for a filing date (see 37 CFR 1.53(b)-(d) and MPEP 506), a Filing Receipt (37 CFR 1.54) will be issued in due course and the date shown on this Acknowledgement Receipt will establish the filing date of the application.

National Stage of an International Application under 35 U.S.C. 371

If a timely submission to enter the national stage of an international application is compliant with the conditions of 35 U.S.C. 371 and other applicable requirements a Form PCT/DO/EO/903 indicating acceptance of the application as a national stage submission under 35 U.S.C. 371 will be issued in addition to the Filing Receipt, in due course.

New International Application Filed with the USPTO as a Receiving Office

If a new international application is being filed and the international application includes the necessary components for an international filing date (see PCT Article 11 and MPEP 1810), a Notification of the International Application Number and of the International Filing Date (Form PCT/RO/105) will be issued in due course, subject to prescriptions concerning national security, and the date shown on this Acknowledgement Receipt will establish the international filing date of the application.

UNITED STATES PATENT AND TRADEMARK OFFICE

UNITED STATES DEPARTMENT OF COMMERCE
United States Patent and Trademark Office
Address: COMMISSIONER FOR PATENTS
P.O. Box 1450
Alexandria, Virginia 22313-1450
www.uspto.gov

APPLICATION NO.	ISSUE DATE	PATENT NO.	ATTORNEY DOCKET NO.	CONFIRMATION NO.
15/732,655	04/02/2019	10249996	18-9521	8356

39820 7590 10/03/2018

LIVINGSTON LOEFFLER, P.A.
963 TRAIL TERRACE DRIVE
NAPLES, FL 34103

ISSUE NOTIFICATION

The projected patent number and issue date are specified above.

Determination of Patent Term Adjustment under 35 U.S.C. 154 (b)
(application filed on or after May 29, 2000)

The Patent Term Adjustment is 0 day(s). Any patent to issue from the above-identified application will include an indication of the adjustment on the front page.

If a Continued Prosecution Application (CPA) was filed in the above-identified application, the filing date that determines Patent Term Adjustment is the filing date of the most recent CPA.

Applicant will be able to obtain more detailed information by accessing the Patent Application Information Retrieval (PAIR) WEB site (http://pair.uspto.gov).

Any questions regarding the Patent Term Extension or Adjustment determination should be directed to the Office of Patent Legal Administration at (571)-272-7702. Questions relating to issue and publication fee payments should be directed to the Application Assistance Unit (AAU) of the Office of Data Management (ODM) at (571)-272-4200.

APPLICANT(s) (Please see PAIR WEB site http://pair.uspto.gov for additional applicants):

Richard Jon Hassey, Punta Gorda, FL;
Richard Jon Hassey, Punta Gorda, FL

The United States represents the largest, most dynamic marketplace in the world and is an unparalleled location for business investment, innovation, and commercialization of new technologies. The USA offers tremendous resources and advantages for those who invest and manufacture goods here. Through SelectUSA, our nation works to encourage and facilitate business investment. To learn more about why the USA is the best country in the world to develop technology, manufacture products, and grow your business, visit SelectUSA.gov.

PART B – FEE(S) TRANSMITTAL

Complete and send this form, together with the applicable fee(s), by mail or fax, or via EFS-Web.

By mail, send to: Mail Stop ISSUE FEE
Commissioner for Patents
P.O. Box 1450
Alexandria, VA 22313-1450

By fax, send to: (571) 273-2885

INSTRUCTIONS: This form should be used for transmitting the ISSUE FEE and PUBLICATION FEE (if required). Blocks 1 through 5 should be completed where appropriate. All further correspondence including the Patent, advance orders and notification of maintenance fees will be mailed to the current correspondence address as indicated unless corrected below or directed otherwise in Block 1, by (a) specifying a new correspondence address; and/or (b) indicating a separate "FEE ADDRESS" for maintenance fee notifications.

CURRENT CORRESPONDENCE ADDRESS (Note: Use Block 1 for any change of address)

LIVINGSTON LOEFFLER, P.A.
963 TRAIL TERRACE DRIVE
NAPLES, FL 34103

Note: A certificate of mailing can only be used for domestic mailings of the Fee(s) Transmittal. This certificate cannot be used for any other accompanying papers. Each additional paper, such as an assignment or formal drawing, must have its own certificate of mailing or transmission.

Certificate of Mailing or Transmission

I hereby certify that this Fee(s) Transmittal is being deposited with the United States Postal Service with sufficient postage for first class mail in an envelope addressed to the Mail Stop ISSUE FEE address above, or being transmitted to the USPTO via EFS-Web or by facsimile to (571) 273-2885, on the date below.

Bryan L. Loeffler	(Typed or printed name)
	(Signature)
02/12/2019	(Date)

APPLICATION NO	FILING DATE	FIRST NAMED INVENTOR	ATTORNEY DOCKET NO	CONFIRMATION NO
15/732,655	12/08/2018	Richard Jon Hassey	18-9521	8356

TITLE OF INVENTION: Television commercial silencer electrical...

APPLN. TYPE	ENTITY STATUS	ISSUE FEE DUE	PUBLICATION FEE DUE	PREV. PAID ISSUE FEE	TOTAL FEE(S) DUE	DATE DUE
nonprovisional	MICRO	$250	0	0	$250	03/18/2019

EXAMINER	ART UNIT	CLASS-SUBCLASS
ANWAH, OLISA	2655	381-085000

1. Change of correspondence address or indication of "Fee Address" (37 CFR 1.363)

☐ Change of correspondence address (or Change of Correspondence Address form PTO/SB/122) attached.

☐ "Fee Address" indication for "Fee Address" Indication form PTO/SB/47; Rev 03-09 or more recent) attached. **Use of a Customer Number is required.**

2. For printing on the patent front page, list

(1) The names of up to 3 registered patent attorneys or agents OR, alternatively,

(2) The name of a single firm (having as a member a registered attorney or agent) and the names of up to 2 registered patent attorneys or agents. If no name is listed, no name will be printed.

1. Edward M. Livingston, Esq.
2. Bryan L. Loeffler, Esq.
3. Livingston Loeffler, P.A.

3. ASSIGNEE NAME AND RESIDENCE DATA TO BE PRINTED ON THE PATENT (print or type)

PLEASE NOTE: Unless an assignee is identified below, no assignee data will appear on the patent. If an assignee is identified below, the document must have been previously recorded, or filed for recordation, as set forth in 37 CFR 3.11 and 37 CFR 3.81(a). Completion of this form is NOT a substitute for filing an assignment.

(A) NAME OF ASSIGNEE (B) RESIDENCE: (CITY and STATE or COUNTRY)

Please check the appropriate assignee category or categories (will not be printed on the patent): ☐ Individual ☐ Corporation or other private group entity ☐ Government

4a. Fees Submitted: ☑ Issue Fee ☐ Publication Fee (if required) ☑ Advance Order - # of Copies 10

4b. Method of Payment (*Please first reapply any previously paid fee shown above*)

☑ Electronic Payment via EFS-Web ☐ Enclosed check ☐ Non-electronic payment by credit card (Attach form PTO-2038)

☐ The Director is hereby authorized to charge the required fee(s), any deficiency, or credit any overpayment to Deposit Account No. _____

5. Change of Entity Status (from status indicated above)

☐ Applicant certifying micro entity status. See 37 CFR 1.29. NOTE: Absent a valid Certification of Micro Entity Status (see forms PTO/SB/15A and 15B), issue fee payment in the micro entity amount will not be accepted at the risk of application abandonment.

☐ Applicant asserting small entity status. See 37 CFR 1.27. NOTE: If the application was previously under micro entity status, checking this box will be taken as a notification of loss of entitlement to micro entity status.

☐ Applicant changing to regular undiscounted fee status. NOTE: Checking this box will be taken as a notification of loss of entitlement to small or micro entity status, as applicable.

NOTE: This form must be signed in accordance with 37 CFR 1.31 and 1.33. See 37 CFR 1.4 for signature requirements and certifications.

Authorized Signature _____ Date 02/12/2019

Typed or printed name Bryan L. Loeffler Registration No 61810

Electronic Patent Application Fee Transmittal	
Application Number:	15732655
Filing Date:	08-Dec-2017
Title of Invention:	Television commercial silencer electrical wall outlet receptacle tap
First Named Inventor/Applicant Name:	Richard Jon Hassey
Filer:	Bryan Laurence Loeffler
Attorney Docket Number:	18-9521
Filed as Micro Entity	

Filing Fees for Utility under 35 USC 111(a)

Description	Fee Code	Quantity	Amount	Sub-Total in USD($)
Basic Filing:				
Pages:				
Claims:				
Miscellaneous-Filing:				
Petition:				
Patent-Appeals-and-Interference:				
Post-Allowance-and-Post-Issuance:				
UTILITY ISSUE FEE	3501	1	250	250

Description	Fee Code	Quantity	Amount	Sub-Total in USD($)
Extension-of-Time:				
Miscellaneous:				
PRINTED COPY OF PATENT - NO COLOR	8001	10	3	30
		Total in USD ($)		**280**

Electronic Acknowledgement Receipt	
EFS ID:	35122754
Application Number:	15732655
International Application Number:	
Confirmation Number:	8356
Title of Invention:	Television commercial silencer electrical wall outlet receptacle tap
First Named Inventor/Applicant Name:	Richard Jon Hassey
Customer Number:	39820
Filer:	Bryan Laurence Loeffler
Filer Authorized By:	
Attorney Docket Number:	18-9521
Receipt Date:	12-FEB-2019
Filing Date:	08-DEC-2017
Time Stamp:	11:00:15
Application Type:	Utility under 35 USC 111(a)

Payment information:

Submitted with Payment	yes
Payment Type	CARD
Payment was successfully received in RAM	$280
RAM confirmation Number	021219INTEFSW11011300
Deposit Account	
Authorized User	
The Director of the USPTO is hereby authorized to charge indicated fees and credit any overpayment as follows:	

File Listing:

Document Number	Document Description	File Name	File Size(Bytes)/ Message Digest	Multi Part /.zip	Pages (if appl.)
1	Issue Fee Payment (PTO-85B)	HASSEY_Issue.pdf	171323	no	1
Warnings:					
Information:					
2	Fee Worksheet (SB06)	fee-info.pdf	32238	no	2
Warnings:					
Information:					
		Total Files Size (in bytes):	203561		

This Acknowledgement Receipt evidences receipt on the noted date by the USPTO of the indicated documents, characterized by the applicant, and including page counts, where applicable. It serves as evidence of receipt similar to a Post Card, as described in MPEP 503.

New Applications Under 35 U.S.C. 111

If a new application is being filed and the application includes the necessary components for a filing date (see 37 CFR 1.53(b)-(d) and MPEP 506), a Filing Receipt (37 CFR 1.54) will be issued in due course and the date shown on this Acknowledgement Receipt will establish the filing date of the application.

National Stage of an International Application under 35 U.S.C. 371

If a timely submission to enter the national stage of an international application is compliant with the conditions of 35 U.S.C. 371 and other applicable requirements a Form PCT/DO/EO/903 indicating acceptance of the application as a national stage submission under 35 U.S.C. 371 will be issued in addition to the Filing Receipt, in due course.

New International Application Filed with the USPTO as a Receiving Office

If a new international application is being filed and the international application includes the necessary components for an international filing date (see PCT Article 11 and MPEP 1810), a Notification of the International Application Number and of the International Filing Date (Form PCT/RO/105) will be issued in due course, subject to prescriptions concerning national security, and the date shown on this Acknowledgement Receipt will establish the international filing date of the application.

PART B – FEE(S) TRANSMITTAL

Complete and send this form, together with the applicable fee(s), by mail or fax, or via EFS-Web.

By mail, send to: Mail Stop ISSUE FEE
Commissioner for Patents
P.O. Box 1450
Alexandria, VA 22313-1450

By fax, send to: (571) 273-2885

INSTRUCTIONS: This form should be used for transmitting the ISSUE FEE and PUBLICATION FEE (if required). Blocks 1 through 5 should be completed where appropriate. All further correspondence including the Patent, advance orders and notification of maintenance fees will be mailed to the current correspondence address as indicated unless corrected below or directed otherwise in Block 1, by (a) specifying a new correspondence address; and/or (b) indicating a separate "FEE ADDRESS" for maintenance fee notifications.

CURRENT CORRESPONDENCE ADDRESS (Note: Use Block 1 for any change of address)

LIVINGSTON LOEFFLER, P.A.
963 TRAIL TERRACE DRIVE
NAPLES, FL 34103

OPAP ANNA-15 FEB 12 2019 PATENT & TRADEMARK OFFICE

Note: A certificate of mailing can only be used for domestic mailings of the Fee(s) Transmittal. This certificate cannot be used for any other accompanying papers. Each additional paper, such as an assignment or formal drawing, must have its own certificate of mailing or transmission.

Certificate of Mailing or Transmission

I hereby certify that this Fee(s) Transmittal is being deposited with the United States Postal Service with sufficient postage for first class mail in an envelope addressed to the Mail Stop ISSUE FEE address above, or being transmitted to the USPTO via EFS-Web or by facsimile to (571) 273-2885, on the date below.

Bryan L. Loeffler (Typed or printed name)
(Signature)
02/12/2019 (Date)

APPLICATION NO	FILING DATE	FIRST NAMED INVENTOR	ATTORNEY DOCKET NO	CONFIRMATION NO
15/732,655	12/08/2018	Richard Jon Hassey	18-9521	8356

TITLE OF INVENTION: Television commercial silencer electrical...

APPLN. TYPE	ENTITY STATUS	ISSUE FEE DUE	PUBLICATION FEE DUE	PREV. PAID ISSUE FEE	TOTAL FEE(S) DUE	DATE DUE
nonprovisional	MICRO	$250	0	0	$250	03/18/2019

EXAMINER	ART UNIT	CLASS-SUBCLASS
ANWAH, OLISA	2655	381-085000

1. Change of correspondence address or indication of "Fee Address" (37 CFR 1.363)

☐ Change of correspondence address (or Change of Correspondence Address form PTO/SB/122) attached.

☐ "Fee Address" indication (or "Fee Address" Indication form PTO/SB/47; Rev 03-09 or more recent) attached. Use of a Customer Number is required.

2. For printing on the patent front page, list

(1) The names of up to 3 registered patent attorneys or agents OR, alternatively,

(2) The name of a single firm (having as a member a registered attorney or agent) and the names of up to 2 registered patent attorneys or agents. If no name is listed, no name will be printed.

1. Edward M. Livingston, Esq.
2. Bryan L. Loeffler, Esq.
3. Livingston Loeffler, P.A.

3. ASSIGNEE NAME AND RESIDENCE DATA TO BE PRINTED ON THE PATENT (print or type)

PLEASE NOTE: Unless an assignee is identified below, no assignee data will appear on the patent. If an assignee is identified below, the document must have been previously recorded, or filed for recordation, as set forth in 37 CFR 3.11 and 37 CFR 3.81(a). Completion of this form is NOT a substitute for filing an assignment.

(A) NAME OF ASSIGNEE (B) RESIDENCE: (CITY and STATE or COUNTRY)

Please check the appropriate assignee category or categories (will not be printed on the patent): ☐ Individual ☐ Corporation or other private group entity ☐ Government

4a. Fees Submitted: ☑ Issue Fee ☐ Publication Fee (if required) ☑ Advance Order - # of Copies 10

4b. Method of Payment (*Please first reapply any previously paid fee shown above*):

☑ Electronic Payment via EFS-Web ☐ Enclosed check ☐ Non-electronic payment by credit card (Attach form PTO-2038)

☐ The Director is hereby authorized to charge the required fee(s), any deficiency, or credit any overpayment to Deposit Account No. _____

5. Change of Entity Status (from status indicated above)

☐ Applicant certifying micro entity status. See 37 CFR 1.29. NOTE: Absent a valid Certification of Micro Entity Status (see forms PTO/SB/15A and 15B), issue fee payment in the micro entity amount will not be accepted at the risk of application abandonment.

☐ Applicant asserting small entity status. See 37 CFR 1.27. NOTE: If the application was previously under micro entity status, checking this box will be taken as a notification of loss of entitlement to micro entity status.

☐ Applicant changing to regular undiscounted fee status. NOTE: Checking this box will be taken as a notification of loss of entitlement to small or micro entity status, as applicable.

NOTE: This form must be signed in accordance with 37 CFR 1.31 and 1.33. See 37 CFR 1.4 for signature requirements and certifications.

Authorized Signature
Date 02/12/2019

Typed or printed name Bryan Loeffler
Registration No. 61810

United States Patent and Trademark Office

- Sales Receipt -

02/12/2019 INTEFSW 00009268 15732655

01 FC:3501 250.00 OP

02 FC:8001 30.00 OP

UNITED STATES PATENT AND TRADEMARK OFFICE

UNITED STATES DEPARTMENT OF COMMERCE
United States Patent and Trademark Office
Address: COMMISSIONER FOR PATENTS
P.O. Box 1450
Alexandria, Virginia 22313-1450
www.uspto.gov

APPLICATION NO.	FILING DATE	FIRST NAMED INVENTOR	ATTORNEY DOCKET NO.	CONFIRMATION NO.
15/732,655	12/08/2017	Richard Jon Hussey	18-9521	8356

39820 7590 01/28/2019

LIVINGSTON LOEFFLER, P.A.
963 TRAIL TERRACE DRIVE
NAPLES, FL 34103

EXAMINER
ANWAH, OLISA

ART UNIT	PAPER NUMBER
2655	

MAIL DATE	DELIVERY MODE
01/28/2019	PAPER

Please find below and/or attached an Office communication concerning this application or proceeding.

The time period for reply, if any, is set in the attached communication.

Supplemental ***Notice of Allowability***	**Application No.** 15/732,655	**Applicant(s)** Hassey, Richard Jon	
	Examiner OLISA ANWAH	**Art Unit** 2655	**AIA Status** Yes

-- The MAILING DATE of this communication appears on the cover sheet with the correspondence address--

All claims being allowable, PROSECUTION ON THE MERITS IS (OR REMAINS) CLOSED in this application. If not included herewith (or previously mailed), a Notice of Allowance (PTOL-85) or other appropriate communication will be mailed in due course. **THIS NOTICE OF ALLOWABILITY IS NOT A GRANT OF PATENT RIGHTS.** This application is subject to withdrawal from issue at the initiative of the Office or upon petition by the applicant. See 37 CFR 1.313 and MPEP 1308.

1. ☑ This communication is responsive to the claims filed on 12/5/2018.
   ☐ A declaration(s)/affidavit(s) under **37 CFR 1.130(b)** was/were filed on _____.

2. ☐ An election was made by the applicant in response to a restriction requirement set forth during the interview on _____; the restriction requirement and election have been incorporated into this action.

3. ☑ The allowed claim(s) is/are 11-18 . As a result of the allowed claim(s), you may be eligible to benefit from the **Patent Prosecution Highway** program at a participating intellectual property office for the corresponding application. For more information, please see **http://www.uspto.gov/patents/init_events/pph/index.jsp** or send an inquiry to **PPHfeedback@uspto.gov.**

4. ☐ Acknowledgment is made of a claim for foreign priority under 35 U.S.C. § 119(a)-(d) or (f).

   Certified copies:

   a) ☐ All b) ☐ Some *c) ☐ None of the:

   1. ☐ Certified copies of the priority documents have been received.
   2. ☐ Certified copies of the priority documents have been received in Application No. _____ .
   3. ☐ Copies of the certified copies of the priority documents have been received in this national stage application from the International Bureau (PCT Rule 17.2(a)).

   * Certified copies not received: _____ .

Applicant has THREE MONTHS FROM THE "MAILING DATE" of this communication to file a reply complying with the requirements noted below. Failure to timely comply will result in ABANDONMENT of this application.
THIS THREE-MONTH PERIOD IS NOT EXTENDABLE.

5. ☐ CORRECTED DRAWINGS (as "replacement sheets") must be submitted.
   ☐ including changes required by the attached Examiner's Amendment / Comment or in the Office action of Paper No./Mail Date _____ .

   Identifying indicia such as the application number (see 37 CFR 1.84(c)) should be written on the drawings in the front (not the back) of each sheet. Replacement sheet(s) should be labeled as such in the header according to 37 CFR 1.121(d).

6. ☐ DEPOSIT OF and/or INFORMATION about the deposit of BIOLOGICAL MATERIAL must be submitted. Note the attached Examiner's comment regarding REQUIREMENT FOR THE DEPOSIT OF BIOLOGICAL MATERIAL.

Attachment(s)

1. ☐ Notice of References Cited (PTO-892)
2. ☐ Information Disclosure Statements (PTO/SB/08), Paper No./Mail Date _____.
3. ☐ Examiner's Comment Regarding Requirement for Deposit of Biological Material _____.
4. ☐ Interview Summary (PTO-413), Paper No./Mail Date. _____.
5. ☑ Examiner's Amendment/Comment
6. ☐ Examiner's Statement of Reasons for Allowance
7. ☐ Other _____.

/OLISA ANWAH/
Primary Examiner, Art Unit 2655

EXAMINER'S AMENDMENT

Allowable Subject Matter

1. Claims 1-18 are allowed.

2. Because claim 17 depends on a canceled claim, an examiner's amendment to the record appears below. Should the changes and/or additions be unacceptable to applicant, an amendment may be filed as provided by 37 CFR 1.312. To ensure consideration of such an amendment, it MUST be submitted no later than the payment of the issue fee.

AMMENDMENT to APPLICATION

3. Please replace claim 17 with the following:

--A television commercial silencer comprising:

an electrical outlet receptacle having a first outlet and a second outlet;

a switch connected to the first outlet and second outlet;

said switch having a first position, a second position and a third position;

wherein when said switch is in the first position, the first outlet is on and the second outlet is off;

wherein when said switch is in the second position, the first outlet is off and the second outlet is off;

wherein when said switch is in the third position, the first outlet is off and the second outlet is on;

said first outlet being connected to at least one speaker connected to a television;

said second outlet being connected to an audio device; and

said at least one speaker connected to said television is connected to the television commercial silencer via a wireless connection.--

Conclusion

4. Any inquiry concerning this communication or earlier communications from the examiner should be directed to OLISA ANWAH whose telephone number is 571-272-7533. The examiner can normally be reached Monday to Friday from 8.30 AM to 6 PM.

If attempts to reach the examiner by telephone are unsuccessful, the examiner's supervisor, Davetta Goins can be reached on 571-272-2957. The fax phone numbers for the organization where this application or proceeding is assigned are 571-273-8300 for regular communications and 571-273-8300 for After Final communications.

Any inquiry of a general nature or relating to the status of this application or proceeding should be directed to the receptionist whose telephone number is 571-272-2600.

Olisa Anwah
Patent Examiner
January 24, 2019

/OLISA ANWAH/
Primary Examiner, Art Unit 2655

Issue Classification	Application/Control No.	Applicant(s)/Patent Under Reexamination
	15/732,655	Hassey, Richard Jon
	Examiner	Art Unit
	OLISA ANWAH	2655

CPC					
Symbol				Type	Version
H01R	25	006		F	2013-01-01
H01R	25	003		I	2013-01-01
G10L	17	22		I	2013-01-01
G10K	11	345		I	2013-01-01
H01R	27	02		I	2013-01-01
H01R	2201	18		A	2013-01-01
H01R	13	6658		A	2013-01-01

CPC Combination Sets					
Symbol			Type	Set	Ranking	Version

NONE		Total Claims Allowed:	
(Assistant Examiner)	(Date)	8	
/OLISA ANWAH/ Primary Examiner, Art Unit 2655	24 January 2019	O.G. Print Claim(s)	O.G. Print Figure
(Primary Examiner)	(Date)	1	1

U.S. Patent and Trademark Office

Part of Paper No.: 20190124

Issue Classification	Application/Control No.	Applicant(s)/Patent Under Reexamination
	15/732,655	Hassey, Richard Jon
	Examiner	Art Unit
	OLISA ANWAH	2655

INTERNATIONAL CLASSIFICATION				
CLAIMED				
H04R	/	27	/	00

NON-CLAIMED				
	/		/	

US ORIGINAL CLASSIFICATION	
CLASS	SUBCLASS

CROSS REFERENCES(S)						
CLASS	SUBCLASS (ONE SUBCLASS PER BLOCK)					

NONE		Total Claims Allowed:	
(Assistant Examiner)	(Date)	8	
/OLISA ANWAH/ Primary Examiner, Art Unit 2655	24 January 2019	O.G. Print Claim(s)	O.G. Print Figure
(Primary Examiner)	(Date)	1	1

U.S. Patent and Trademark Office — Part of Paper No.: 20190124

Issue Classification	Application/Control No.	Applicant(s)/Patent Under Reexamination
	15/732,655	Hassey, Richard Jon
	Examiner	**Art Unit**
	OLISA ANWAH	2655

☐ Claims renumbered in the same order as presented by applicant ☐ CPA ☐ T.D. ☐ R.1.47

CLAIMS

Final	Original	Final	Original	Final	Original	Final	Original	Final	Original	Final	Original	Final	Original	Final	Original
	1		10		19										
	2	1	11		20										
	3	2	12												
	4	3	13												
	5	4	14												
	6	5	15												
	7	6	16												
	8	7	17												
	9	8	18												

NONE		**Total Claims Allowed:**	
(Assistant Examiner)	(Date)	8	
/OLISA ANWAH/ Primary Examiner, Art Unit 2655	24 January 2019	O.G. Print Claim(s)	O.G. Print Figure
(Primary Examiner)	(Date)	1	1

U.S. Patent and Trademark Office Part of Paper No.: 20190124

Search Notes	Application/Control No.	Applicant(s)/Patent Under Reexamination
	15/732,655	Hassey, Richard Jon
	Examiner	Art Unit
	OLISA ANWAH	2655

CPC - Searched*		
Symbol	Date	Examiner
H04R27/00	3/6/2018	OA

CPC Combination Sets - Searched*		
Symbol	Date	Examiner

US Classification - Searched*			
Class	Subclass	Date	Examiner

* See search history printout included with this form or the SEARCH NOTES box below to determine the scope of the search.

Search Notes		
Search Notes	Date	Examiner
East search	3/6/2018	OA
Spoke with Gerald Gauthier	3/6/2018	OA
East search	9/10/2018	OA
Spoke with Oyesola Ojo	9/7/2018	OA
East search	12/6/2018	OA

Interference Search			
US Class/CPC Symbol	US Subclass/CPC Group	Date	Examiner
H04R27/00		01/24/2019	OA

/OLISA ANWAH/
Primary Examiner.Art Unit 2655

EAST Search History

EAST Search History (Interference)

Ref #	Hits	Search Query	DBs	Default Operator	Plurals	Time Stamp
L1	1	((television or tv) adj commercial same silenc$3).clm.	US-PGPUB	OR	OFF	2019/01/24 17:01

1/ 24/ 2019 5:01:57 PM
C:\ Users\ oanwah\ Documents\ EAST\ Workspaces\ ~ auto.01102018.141904.bak.wsp

UNITED STATES PATENT AND TRADEMARK OFFICE

UNITED STATES DEPARTMENT OF COMMERCE
United States Patent and Trademark Office
Address: COMMISSIONER FOR PATENTS
P.O. Box 1450
Alexandria, Virginia 22313-1450
www.uspto.gov

NOTICE OF ALLOWANCE AND FEE(S) DUE

39820 7590 12/17/2018

LIVINGSTON LOEFFLER, P.A.
963 TRAIL TERRACE DRIVE
NAPLES, FL 34103

EXAMINER	
ANWAH, OLISA	
ART UNIT	PAPER NUMBER
2655	

DATE MAILED: 12/17/2018

APPLICATION NO.	FILING DATE	FIRST NAMED INVENTOR	ATTORNEY DOCKET NO.	CONFIRMATION NO.
15/732,655	12/08/2017	Richard Jon Hassey	18-9521	8356

TITLE OF INVENTION: Television commercial silencer electrical wall outlet receptacle tap

APPLN. TYPE	ENTITY STATUS	ISSUE FEE DUE	PUBLICATION FEE DUE	PREV. PAID ISSUE FEE	TOTAL FEE(S) DUE	DATE DUE
nonprovisional	MICRO	$250	$0.00	$0.00	$250	03/18/2019

THE APPLICATION IDENTIFIED ABOVE HAS BEEN EXAMINED AND IS ALLOWED FOR ISSUANCE AS A PATENT. PROSECUTION ON THE MERITS IS CLOSED. THIS NOTICE OF ALLOWANCE IS NOT A GRANT OF PATENT RIGHTS. THIS APPLICATION IS SUBJECT TO WITHDRAWAL FROM ISSUE AT THE INITIATIVE OF THE OFFICE OR UPON PETITION BY THE APPLICANT. SEE 37 CFR 1.313 AND MPEP 1308.

THE ISSUE FEE AND PUBLICATION FEE (IF REQUIRED) MUST BE PAID WITHIN THREE MONTHS FROM THE MAILING DATE OF THIS NOTICE OR THIS APPLICATION SHALL BE REGARDED AS ABANDONED. THIS STATUTORY PERIOD CANNOT BE EXTENDED. SEE 35 U.S.C. 151. THE ISSUE FEE DUE INDICATED ABOVE DOES NOT REFLECT A CREDIT FOR ANY PREVIOUSLY PAID ISSUE FEE IN THIS APPLICATION. IF AN ISSUE FEE HAS PREVIOUSLY BEEN PAID IN THIS APPLICATION (AS SHOWN ABOVE), THE RETURN OF PART B OF THIS FORM WILL BE CONSIDERED A REQUEST TO REAPPLY THE PREVIOUSLY PAID ISSUE FEE TOWARD THE ISSUE FEE NOW DUE.

HOW TO REPLY TO THIS NOTICE:

I. Review the ENTITY STATUS shown above. If the ENTITY STATUS is shown as SMALL or MICRO, verify whether entitlement to that entity status still applies.

If the ENTITY STATUS is the same as shown above, pay the TOTAL FEE(S) DUE shown above.

If the ENTITY STATUS is changed from that shown above, on PART B - FEE(S) TRANSMITTAL, complete section number 5 titled "Change in Entity Status (from status indicated above)".

For purposes of this notice, small entity fees are 1/2 the amount of undiscounted fees, and micro entity fees are 1/2 the amount of small entity fees.

II. PART B - FEE(S) TRANSMITTAL, or its equivalent, must be completed and returned to the United States Patent and Trademark Office (USPTO) with your ISSUE FEE and PUBLICATION FEE (if required). If you are charging the fee(s) to your deposit account, section "4b" of Part B - Fee(s) Transmittal should be completed and an extra copy of the form should be submitted. If an equivalent of Part B is filed, a request to reapply a previously paid issue fee must be clearly made, and delays in processing may occur due to the difficulty in recognizing the paper as an equivalent of Part B.

III. All communications regarding this application must give the application number. Please direct all communications prior to issuance to Mail Stop ISSUE FEE unless advised to the contrary.

IMPORTANT REMINDER: Maintenance fees are due in utility patents issuing on applications filed on or after Dec. 12, 1980. It is patentee's responsibility to ensure timely payment of maintenance fees when due. More information is available at www.uspto.gov/PatentMaintenanceFees.

UNITED STATES PATENT AND TRADEMARK OFFICE

UNITED STATES DEPARTMENT OF COMMERCE
United States Patent and Trademark Office
Address: COMMISSIONER FOR PATENTS
P.O. Box 1450
Alexandria, Virginia 22313-1450
www.uspto.gov

APPLICATION NUMBER	FILING OR 371(C) DATE	FIRST NAMED APPLICANT	ATTY. DOCKET NO./TITLE
15/732,655	12/08/2017	Richard Jon Hassey	18-9521

CONFIRMATION NO. 8356

39820
LIVINGSTON LOEFFLER, P.A.
963 TRAIL TERRACE DRIVE
NAPLES, FL 34103

PUBLICATION NOTICE

OC000000100757818

Title: Television commercial silencer electrical wall outlet receptacle tap

Publication No.US-2018-0191111-A1
Publication Date:07/05/2018

NOTICE OF PUBLICATION OF APPLICATION

The above-identified application will be electronically published as a patent application publication pursuant to 37 CFR 1.211, et seq. The patent application publication number and publication date are set forth above.

The publication may be accessed through the USPTO's publically available Searchable Databases via the Internet at www.uspto.gov. The direct link to access the publication is currently http://www.uspto.gov/patft/.

The publication process established by the Office does not provide for mailing a copy of the publication to applicant. A copy of the publication may be obtained from the Office upon payment of the appropriate fee set forth in 37 CFR 1.19(a)(1). Orders for copies of patent application publications are handled by the USPTO's Public Records Division. The Public Records Division can be reached by telephone at (571) 272-3150 or (800) 972-6382, by facsimile at (571) 273-3250, by mail addressed to the United States Patent and Trademark Office, Public Records Division, Alexandria, VA 22313-1450 or via the Internet.

In addition, information on the status of the application, including the mailing date of Office actions and the dates of receipt of correspondence filed in the Office, may also be accessed via the Internet through the Patent Electronic Business Center at www.uspto.gov using the public side of the Patent Application Information and Retrieval (PAIR) system. The direct link to access this status information is currently https://portal.uspto.gov/pair/PublicPair. Prior to publication, such status information is confidential and may only be obtained by applicant using the private side of PAIR.

Further assistance in electronically accessing the publication, or about PAIR, is available by calling the Patent Electronic Business Center at 1-866-217-9197.

Office of Data Managment, Application Assistance Unit (571) 272-4000, or (571) 272-4200, or 1-888-786-0101

PART B - FEE(S) TRANSMITTAL

Complete and send this form, together with applicable fee(s), by mail or fax, or via EFS-Web.

By mail, send to: Mail Stop ISSUE FEE
Commissioner for Patents
P.O. Box 1450
Alexandria, Virginia 22313-1450

By fax, send to: (571)-273-2885

INSTRUCTIONS: This form should be used for transmitting the ISSUE FEE and PUBLICATION FEE (if required). Blocks 1 through 5 should be completed where appropriate. All further correspondence including the Patent, advance orders and notification of maintenance fees will be mailed to the current correspondence address as indicated unless corrected below or directed otherwise in Block 1, by (a) specifying a new correspondence address; and/or (b) indicating a separate "FEE ADDRESS" for maintenance fee notifications.

CURRENT CORRESPONDENCE ADDRESS (Note: Use Block 1 for any change of address)

39820 7590 12/17/2018
LIVINGSTON LOEFFLER, P.A.
963 TRAIL TERRACE DRIVE
NAPLES, FL 34103

Note: A certificate of mailing can only be used for domestic mailings of the Fee(s) Transmittal. This certificate cannot be used for any other accompanying papers. Each additional paper, such as an assignment or formal drawing, must have its own certificate of mailing or transmission.

Certificate of Mailing or Transmission

I hereby certify that this Fee(s) Transmittal is being deposited with the United States Postal Service with sufficient postage for first class mail in an envelope addressed to the Mail Stop ISSUE FEE address above, or being transmitted to the USPTO via EFS-Web or by facsimile to (571) 273-2885, on the date below.

(Signature)
(Date)

APPLICATION NO.	FILING DATE	FIRST NAMED INVENTOR	ATTORNEY DOCKET NO.	CONFIRMATION NO.

United States Patent and Trademark Office

Office of the Commissioner for Patents

Maintenance Fee Statement

CURRENT CORRESPONDENCE ADDRESS	CUSTOMER #	ENTITY STATUS	STATEMENT GENERATED
WOODARD, EMHARDT, HENRY, REEVES & WAGNER, LLP 111 MONUMENT CIRCLE, SUITE 3700 INDIANAPOLIS, IN 46204-5137	30565	MICRO	05/23/2024 12:00:56

Invention

TELEVISION COMMERCIAL SILENCER ELECTRICAL WALL OUTLET RECEPTACLE TAP

PATENT #	APPLICATION #	FILING DATE	ISSUE DATE
10249996	15732655	12/08/2017	04/02/2019

Payment Details

PAYMENT DATE	DATE POSTED	TRANSACTION ID	ATTORNEY DOCKET #	TOTAL PAYMENT
03/18/2023	03/20/2023	E20233H457375800		$500.00

Fee Code	Description	Sale ID	Fee Amount
3551	MAINTENANCE FEE DUE AT 3.5 YEARS	E20233H457375800	$400.00
3554	MAINTENANCE FEE SURCHARGE- 3.5 YEAR- LATE PAYMENT WITHIN 6 MONTHS	E20233H457375800	$100.00

According to the records of the United States Patent and Trademark Office (USPTO), the maintenance fee and any necessary surcharge have been timely paid for the patent listed above. The payment shown above is subject to actual collection. If the payment is refused or charged back by a financial institution, the payment will be void and the maintenance fee and any necessary surcharge unpaid.

2017 KICKSTARTER PROJECT

https://www.kickstarter.com/projects/commercialsilencer/no-more-television-commercials?ref=user_menu


07 05 2017


07 23 2017

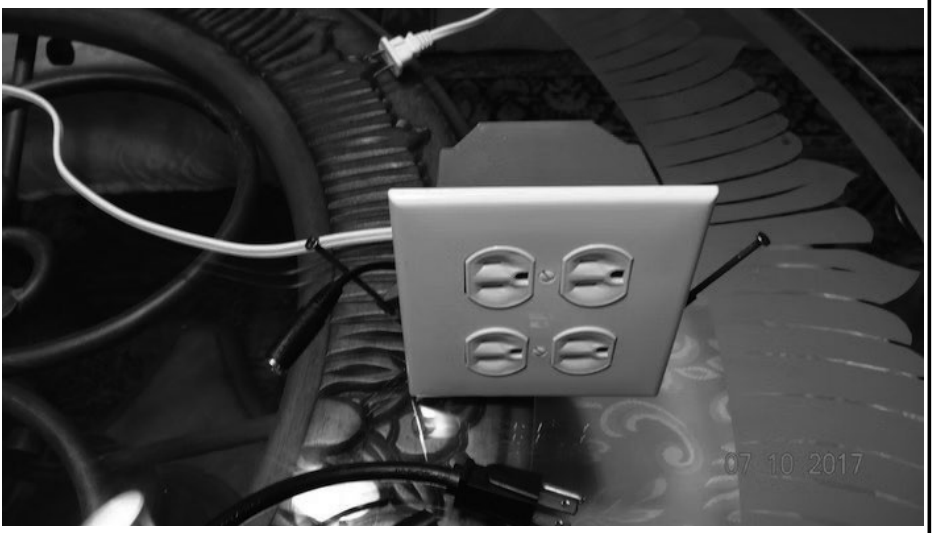
07 10 2017


07 23 2017


07 10 2017

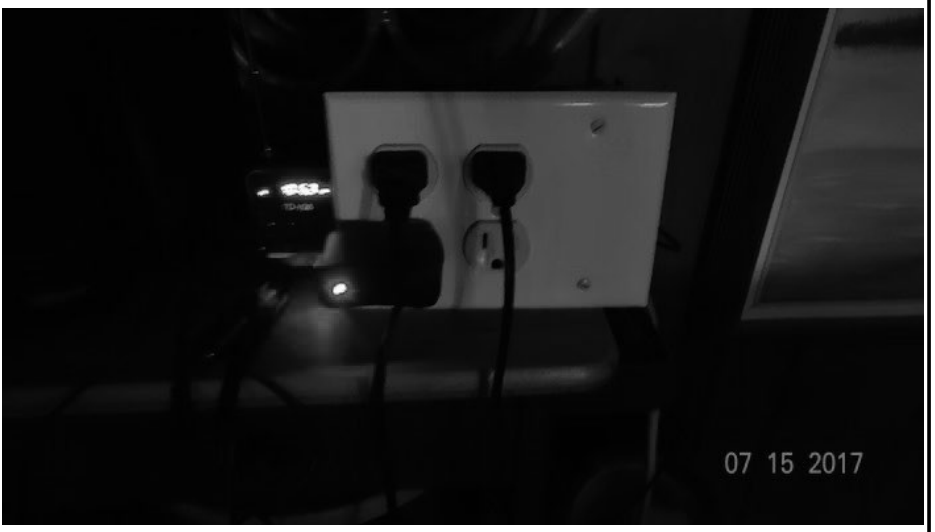
07 15 2017

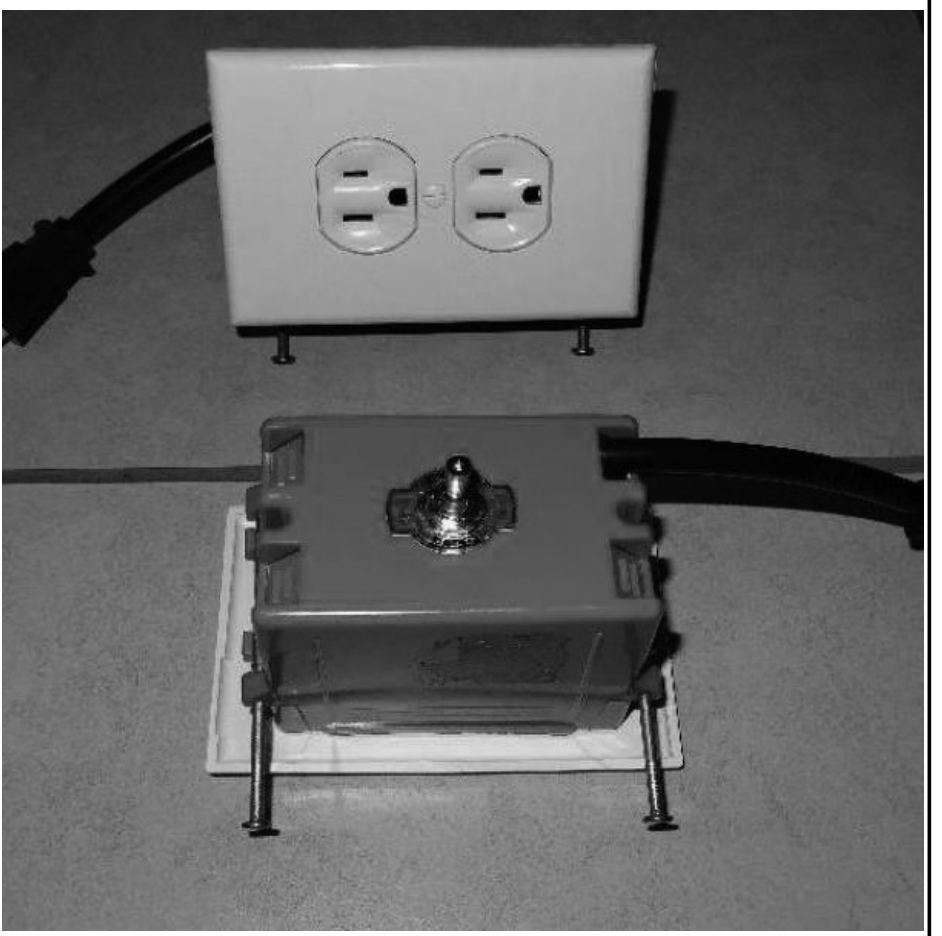

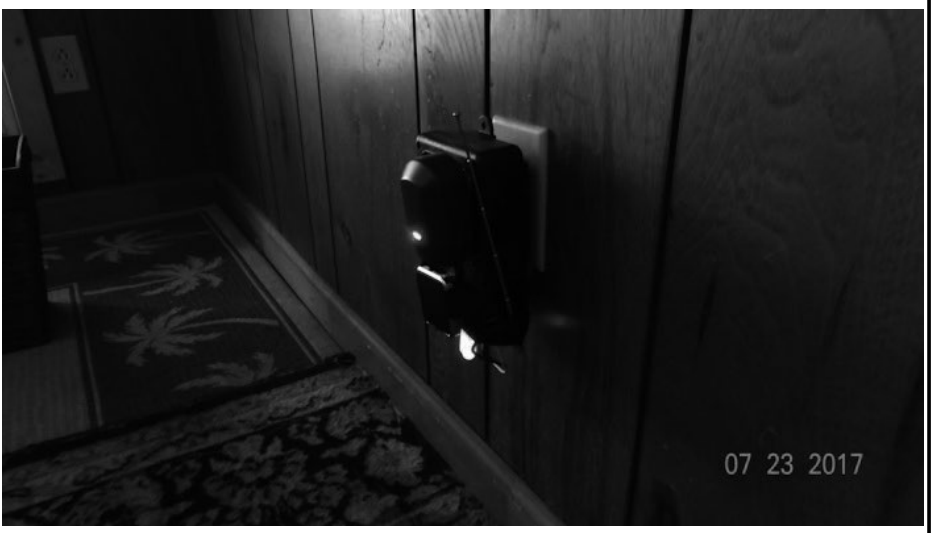
07 23 2017



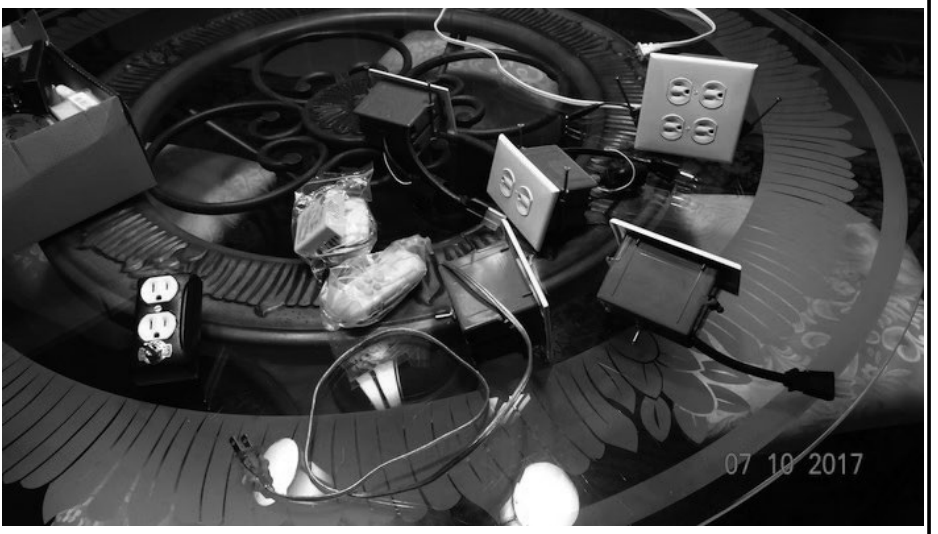
07 10 2017

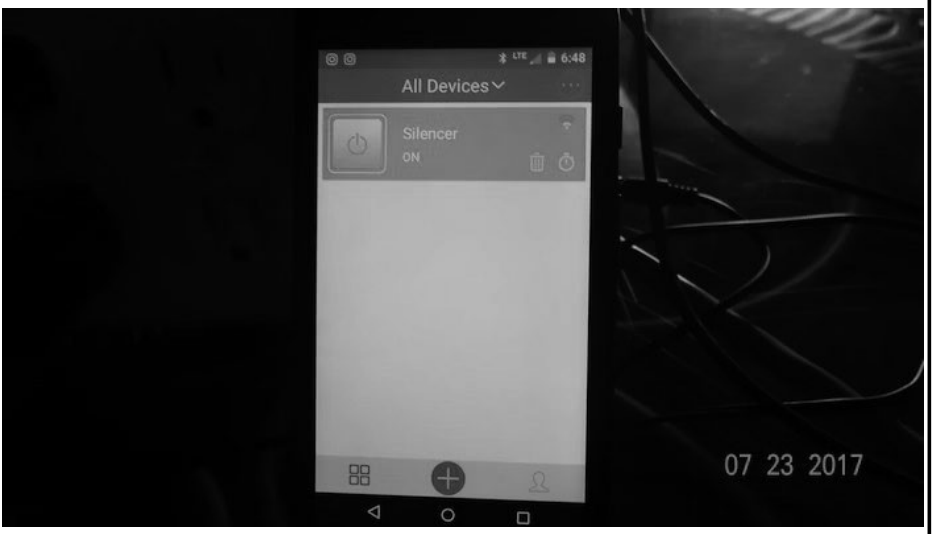
6:48
All Devices
Silencer
ON
07 23 2017


07 10 2017


07 12 2017



YOU have reached the end of

The Silencer Project:

The Power of **“The Night Sun!”**

☼+◖ = *

by True Life Poet

Please consider other books from

BSPC Global Corporation DBA
Burnt Store Publishers

EFS Global Corporation DBA
Eating For “SELF” ™ and
True Life Poet ™

Richard Jon Hassey,
Nelfa Salise Hassey and
Precious Anne Salise

Look for The Silencer Project’s Companion Book, The Poker Game Algorithm for MORE on these “Stories” and Computer Science.

The Power of “The Night Sun” ☼ is total eclipse, or the joining of the sun ☼ with the moon, ◖ that is, The Birth of The “Night Star,” * a new entity, and the first “Picture Painting.” ☼+◖ = * See The Domestic marine ® Companion Book, The Furthest and Nearest “Night Stars:” ☼,◖ The Birth of The “Night Star.” *

Also See The Tandem Poetry Series. -- “Equational Poetry,” ™ Engendered Poetry, Invisilife Poetry, and “Picture Paintings” Poetry.

Copyright © 2026 True Life Poet, ™
All rights reserved.

ISBN: 979-8-951719-12-6



Aces “ofLoves” ♥♣♦♠

Thank YOU for reading.



The Silencer Project
thesilencerproject.com

ISBN 979-8-95-171912-6

True Life Poet™